DIVISION: 05 00 00 – METALS
Section: 05 40 00 – Cold-Formed Metal Framing
Section: 05 41 00 – Structural Metal Stud Framing
Section: 05 42 00 – Cold-Formed Metal Joist
DIVISION: 09 00 00 – FINISHES
Section: 09 22 16 – Nonstructural Metal Framing

STEEL FRAMING INDUSTRY ASSOCIATION
513 WEST BROAD STREET, SUITE 210
FALLS CHURCH, VIRGINIA 22046
(703) 538-1602
www.steelframingassociation.org

ADDITIONAL LISTEES:

CALIFORNIA EXPANDED METAL PRODUCTS COMPANY (CEMCO)
13191 CROSSROADS PARKWAY NORTH SUITE 325
CITY OF INDUSTRY, CA 91746
(626) 369-3564
www.cemcosteel.com

CGK, INC. DBA PREMIER STEEL FABRICATION
10811 RUSH STREET
SOUTH EL MONTE, CA 91733
(626) 444-2649
http://www.premiersteelfabrication.com

CLARKDIETRICH™ BUILDING SYSTEMS
9100 CENTRE POINTE DR., SUITE 210
WEST CHESTER, OH 45069
(513) 870-1100
www.clarkdietrich.com

DOUGLAS STEEL SUPPLY & FRAMING
3311 SLAUSON AVE
VERNON, CA 90058
(800) 540-0959
www.douglassteelsupply.com

FRAMETEK STEEL PRODUCTS INC.
1495 COLUMBIA AVE, BUILDING 4
RIVERSIDE, CA 92507
(951) 369-5204
www.frameteksteel.com

J AND S LIVONIA, INC. DBA JAIMES INDUSTRIES
35305 GLENDALE ROAD
LIVONIA, MI 48150
(734) 793-9000
www.JaimesInd.com

JOBSITE STEEL MANUFACTURING, LLC
5901 INDUSTRIAL PARK DRIVE
LENOIR CITY, TN 37771
(865) 816-3847
www.jobsitesteel.com

MB STEEL COMPANY
9 FOX INDUSTRIAL PARK
MADISON, IL 62060
(618) 877-7000
www.mbsteel.com

OLMAR SUPPLY, INC
2140 RESEARCH DRIVE
LIVERMORE, CA 94550
(925) 447-3500
www.olmarsupply.com

PRIEFERT MANUFACTURING, INC
1325 RIVER ST.
BENTON, AZ 72015
(903) 572-1741
www.priefertsteel.com

QUAIL RUN BUILDING MATERIALS, INC.
2102 W LONE CACTUS DR,
PHOENIX, AZ 85027
(602) 269-2316
www.QRBM.com

R & P SUPPLY, INC
2642 E LONE MOUNTAIN ROAD
NORTH LAS VEGAS, NV 89081
(707) 400-8539
http://rpsupplyinc.com

TNT MANUFACTURING
12119 LAKESIDE AVE
LAKESIDE, CA 92040
(619) 390-4557

REPORT SUBJECT:
Standard Cold-Formed Steel Framing Members

1.0 SCOPE OF EVALUATION

1.1. This research report addresses compliance with the following Codes:

- 2015 and 2012 *International Building Code®* (IBC)
- 2015 and 2012 *International Residential Code®* (IRC)
- 2014 *Florida Building Code - Building* (FBC-B) (see Section 9)
- 2014 *Florida Building Code - Residential* (FBC-R) (see Section 9)
- 2016 *California Building Code* (CBC) (see Section 10)
- 2016 *California Residential Code* (CRC) (see Section 10)

1.2. Standard Cold-Formed Steel Framing Members have been evaluated for the following properties:

- Structural
- Corrosion protection

1.3. Cold-formed steel framing members (studs, tracks, and U-channels) recognized in this report are used for framing of nonload-bearing interior walls, curtain walls, load-bearing walls, floor joists, headers, roof rafters and roof trusses.

2.0 STATEMENT OF COMPLIANCE

Cold-formed steel framing members comply with the Codes listed in Section 1.1, for the properties stated in Section 1.2 and uses stated in Section 1.3, when installed as described in this report, including the Conditions of Use stated in Section 6.

3.0 DESCRIPTION

3.1. Materials

3.1.1. Non-structural steel framing members are cold-formed from steel coils conforming to ASTM A 1003 Non-Structural Grade, Type NS. Non-structural members have a minimum protective coating of G40 galvanization conforming to ASTM A 653.

3.1.2. Structural steel framing members are cold-formed from steel coils conforming to ASTM A 1003 Structural Grade 33 Type H and Structural Grade 50 Type H. Structural members have a minimum protective coating in accordance with Table 1, CP 60 as listed in ASTM C 955.

3.2. Studs are manufactured with and without factory web punchouts. Web punchout holes are spaced a minimum of 24 inches on center along the stud length and shall not be located less than 10 inches from the end of the member to the near edge of the web punchout. Web punch-out widths shall not exceed 2.5 inches, or half of the member depth. Web punch-out length shall not exceed 4.5 inches. Tracks and U-channels are manufactured without web punch-outs.

3.3. See page 2 of the SFIA Technical Guide for Cold-Formed Steel Framing Products for member designations**.**

4.0 PERFORMANCE CHARACTERISTICS

4.1. Reference the SFIA Technical Guide for Cold-Formed Steel Framing Products (attached) for section properties and design capacities established in accordance with AISI S100 and, AISI S200 or S220, as applicable, where only the following pages are within the scope of this report:

4.1.1. General Product Information on pages 2-4.

4.1.2. Non-Structural Stud, Structural Stud, and Track Section Properties on pages 5-18

4.1.3. Limiting Wall Heights Tables for Interior Non-Structural Non-Composite on pages 19-22.

4.1.4. Limiting Wall Height Tables for Interior Non-Structural Composite on pages 23-24. Gypsum wall board must be a minimum of 5/8” thick and Type X, complying with ASTM C1396 and manufactured by American

Gypsum, CertainTeed, Georgia Pacific, Lafarge, National Gypsum, Temple-Inland, or USG. The interior nonload-bearing wall assemblies shall be limited to interior installations where the superimposed axial load is zero pounds.

4.1.5. Limiting Wall Heights Tables for Curtain Wall Single-Span on pages 25-36.

4.1.6. Combined Axial and Lateral Allowable Load Tables on pages 37-61

4.1.7. Allowable Floor Joist Span Tables on pages 62-75

4.1.8. Header Allowable Load Tables on pages 76-80. Lateral bracing of the compression flange shall be spaced at intervals not exceeding L_u (see section properties) to develop full allowable bending strength, M_a.

4.1.9. Allowable Web Crippling Load Tables on pages 81-85

4.1.10. U-Channel Section Properties on page 86. Allowable moments (M_a) apply to flexural members with the compression flange continuously braced.

4.2. For construction governed by the FBC High Velocity Hurricane Zone (HVHZ), the interior wall heights are limited to the heights at the L/240 and L/360 deflection levels.

5.0 INSTALLATION

Standard cold-formed steel framing members must be installed in accordance with the manufacturer's published installation instructions, the applicable Code and referenced AISI standards therein for cold-formed steel light-frame construction, including Section 2211 of the IBC, FBC-B, and CBC, and Sections R505, R603, and R804 of the IRC, FBC-R, and CRC. The manufacturer's published installation instructions and this Research Report must be strictly adhered to, and a copy of the instructions must be available on the jobsite during installation.

6.0 CONDITION OF USE

The cold-formed steel framing members described in this Research Report comply with, or is a suitable alternative to, what is specified in those Codes listed in Sections 1.0 and 2.0 of this report, subject to the following conditions:

6.1. Installation must comply with this Research Report, the manufacturer's published installation instructions and the applicable Code. In the event of a conflict between the manufacturer's instructions and this report, this report governs.

6.2. All designs and calculations shall be prepared by a licensed design professional according to the requirements in the jurisdiction where the project is located.

6.3. Jobsite manufacturing of studs or tracks is outside the scope of this report.

6.4. Wall assemblies based upon non-composite construction, pages 19-22 of the attached SFIA Technical Guide, are limited to a lateral (transverse) load of not more than 10 lb/ft^2, a superimposed vertical load, exclusive of sheathing materials, of not more than 100 lbf/ft, or a superimposed vertical load of not more than 200 lbs per stud.

6.5. The minimum base steel thickness of the section delivered to the jobsite must be 95% of the design thickness noted on page 3 of the SFIA Technical Guide for Cold-Formed Steel Framing Products.

6.6. Cold-Formed steel framing members identified in this report are manufactured at the manufacturing facilities recognized in Table 2 in accordance with the manufacturer's approved quality control system with inspections by Intertek (IAS AA-676).

7.0 SUPPORTING EVIDENCE

7.1. Manufacturer's drawings and installation instructions.

7.2. Steel Framing Industry Association Technical Guide for Cold-Formed Steel Framing Products, Version 2015.101

7.3. Reports of testing and engineering analysis demonstrating compliance with ICC-ES AC46, *Acceptance Criteria for Cold-formed Steel Framing Members*, editorially revised April 2015.

7.4. Reports of evaluation and engineering analysis in accordance with AISI S100-12, North American Specification for the Design of Cold-Formed Steel Structural Members.

7.4.1. AISI S100-07 reviewed and deemed equivalent to AISI S100-12 for compliance with 2014 FBC.

7.5. Reports of testing and engineer analysis demonstrating compliance with ICC-ES AC86, Acceptance Criteria for Cold-Formed Steel Framing Members - Interior Nonload-Bearing Wall Assemblies, revised August 2015.

7.6. Documentation of an Intertek approved quality control system for the manufacturing of products recognized in this report.

8.0 IDENTIFICATION

The Standard Cold-Formed Steel Framing Members described in this Research Report are identified with labeling at a maximum of 96 inches that includes the following information:

8.1. Manufacturer's name, logo, or other positive identification;

8.2. For structural steel framing members: framing member designation, uncoated metal thickness, yield strength, and galvanization coating designation, CP60

8.3. For non-structural steel framing members: framing member designation, uncoated metal thickness, yield strength if other than 33 ksi, galvanization coating if other than G40, and designation "NS".

8.4. Intertek designation and Code Compliance Research Report number (Intertek CCRR-0224)

8.5. Bundles of like members shall be identified with the Intertek identification mark and Code Compliance Research Report number as shown:

CODE COMPLIANCE
Intertek
CCRR-0224

9.0 FLORIDA BUILDING CODE

9.1. Scope of Evaluation: The Standard Cold-Formed Steel Framing Members were evaluated for compliance with the 2014 *Florida Building Code – Building and Florida Building Code – Residential.*

9.2. Conclusion: The Standard Cold-Formed Steel Framing Members, described in Sections 2.0 through 7.0 of this Research Report, comply with the 2014 *Florida Building Code – Building* and *Florida Building Code – Residential*, including the High-Velocity Hurricane Zone provisions.

10.0 CALIFORNIA BUILDING CODE

10.1. Scope of Evaluation: The Standard Cold-Formed Steel Framing Members were evaluated for compliance with the 2016 California Building Code and California Residential Code.

This Code Compliance Research Report ("Report") is for the exclusive use of Intertek's Client and is provided pursuant to the agreement between Intertek and its Client. Intertek's responsibility and liability are limited to the terms and conditions of the agreement. Intertek assumes no liability to any party, other than to the Client in accordance with the agreement, for any loss, expense or damage occasioned by the use of this Report. Only the Client is authorized to permit copying or distribution of this Report and then only in its entirety, and the Client shall not use the Report in a misleading manner. Client further agrees and understands that reliance upon the Report is limited to the representations made therein. The Report is not an endorsement or recommendation for use of the subject and/or product described herein. This Report is not the Intertek Listing Report covering the subject product and utilized for Intertek Certification and this Report does not represent authorization for the use of any Intertek certification marks. Any use of the Intertek name or one of its marks for the sale or advertisement of the tested material, product or service must first be approved in writing by Intertek.

10.2. Conclusion: The Standard Cold-Formed Steel Framing Members, described in Sections 2.0 through 7.0 of this Research Report, comply with the 2016 *California Building Code* and *California Residential Code*.

11.0 CODE COMPLIANCE RESEARCH REPORT USE

11.1. Approval of building products and/or materials can only be granted by a building official having legal authority in the specific jurisdiction where approval is sought.

11.2. Code Compliance Research Reports shall not be used in any manner that implies an endorsement of the product by Intertek.

11.3. Reference to the Intertek web site, https://bpdirectory.intertek.com is recommended to ascertain the current version and status of this report.

Table 1 – Code Referenced Standards

2015 IBC		2012 IBC & 2014 FBC		2016 CBC	
Structural members	Nonstructural members	Structural members	Nonstructural members	Structural members	Nonstructural members
AISI S100-12 AISI S200-12 ASTM C955-11c Section 8	AISI S100-12 AISI S220-11 ASTM C645-13 Section 10	AISI S100-07 AISI S200-07 ASTM C955-09	AISI S100-07 AISI S200-07 ASTM C645-08a	AISI S100-07 AISI S200-12 ASTM C955-11c Section 8	AISI S100-07 AISI S220-11 ASTM C645-13 Section 10

Table 2 – Manufacturing Locations

Listee	Location
CEMCO	263 North Covina Lane, City of Industry, CA 91746
	490 Osage Street, Denver, CO 80204
	8600 Will Rodgers Boulevard, Fort Worth, TX 76140
	1741-A Pittsburg-Antioch Highway, Pittsburg, CA 94565
ClarkDietrich™ Building Systems	38020 Pulp Dr, Dade City, FL 33523
	91-300 Hanua St., Kapolei, HI 96707
	6510 General Drive, Riverside, CA 92509
	1685 Tide Court, Woodland, CA 95776
Douglas Steel Framing	3311 Slauson Ave., Vernon, CA 90058
Frametek Steel Products	1495 Columbia Ave, Riverside, CA 92507
Jaimes Industries	35305 Glendale Road, Livonia, MI 48150
Jobsite Steel Manufacturing, LLC	5901 Industrial Park Drive, Lenoir City, TN 37771
MB Steel Company	9 Fox Industrial Park, Madison, IL 62060
Olmar Supply, Inc.	2140 Research Drive, Livermore, CA 94550
Premier Steel Fabrication	10811 Rush Street, South El Monte, CA 91733
Priefert Manufacturing	1325 River Street, Benton, AR 72015
Quail Run Building Materials	2102 W Lone Cactus Dr, Phoenix, AZ 85027
R&P Supply, Inc.	2642 East Lone Mountain Rd, North Las Vegas, NV 89081
TNT Manufacturing	12119 Lakeside Ave, Lakeside, CA 92040

Technical Guide for Cold-Formed Steel Framing Products

Technical Data in this publication is applicable to the following SFIA Member Company:

For a complete directory of SFIA Members who are certified for compliance with the International Building Code and all appplicable ASTM and AISI Standards:

http://www.archtest.com/certification/SFIA_SteelFraming.aspx

The data in this guide is based upon the 2012 American Iron and Steel Institute's S100-12 "North American Specification for the Design of Cold-Formed Steel Structural Members" and meets the requirements of the IBC 2015 Building Code, as well as the 2013 California Building Code and 2014 Florida Building Code.

Complies with the 2015 IBC and AISI S100-12

Introduction

The Steel Framing Industry Association (SFIA) was formed with the objective of assisting companies having interests in the cold-formed steel framing industry to be more successful by unifying the industry to expand the market for the use of cold formed steel systems through:

(a) Quality Assurance

(b) Promotion

(c) Advocacy

(d) Education

(e) Innovation

The SFIA developed this Industry leading product technical guide to comply with the latest building codes and standards. The data in this catalog based on the American Iron and Steel Institute's AISI S100-12 "North American Specification for the Design of Cold-Formed Steel Structural Members and meets the requirments of the IBC 2015 Building Code. While building codes vary by jurisdiction, this program follows the most recent international standards published by the International Code Council.

Material Specification

Products manufactured by SFIA members are formed from steel with a minimum yield stress of 33 or 50 kips per square inch (ksi). Unless noted otherwise, all products covered in this SFIA catalog are engineered to meet the 2012 edition of the American Iron and Steel Institute (AISI) S100-12, "North American Specification of the Design of Cold-Formed Steel Structural Members" and other AISI standards referenced in Section 2210 of the 2015 International Building Code (IBC-2012). The structural properties in this SFIA catalog have been computed based on allowable stress design (ASD) which includes distortional buckling considerations for all Stud Sections. For fastener tables, screw sizes and head diameters do not refer to specific fasteners which may or may not be available from SFIA member companies. Shear and tension data for screws was developed using published manufacturer data and evaluation reports available at the time of publications.

Disclaimer

A concerted effort has been made to ensure the accuracy of the technical data represented in this catalog. The Steel Framing Industry Association makes no representation, warranty, or guarantee in connection with this technical data and expressly disclaims any liability or responsibility for failure resulting from the use or misapplication of computations, detail drawings and specifications contained herein. All data, specifications and details contained in this catalog publications are intended as a general guide for using SFIA member companies products. These products should not be used in design or construction without an independent evaluation by a qualified engineer or architect to verify the suitability of a particular product for use in a specific application. This publication containes the latest information available at the time of printing. The SFIA and its member companies reserve the right to make modifications and/or change materials of any of their products without prior notice or obligation. For the latest information regarding a particular manufacturer's products contact that manufacturer. All SFIA manufacturers may not produce all of the products listed in this catalog. Please contact manufacturer to verify product availablity.

Copyright
©2015 Steel Framing Industry Association

Table of Contents

SFIA
STEEL FRAMING INDUSTRY ASSOCIATION

INTRODUCTION ..... Inside Front Cover

Material Specifications ..... Inside Front Cover

Disclaimer ..... Inside Front Cover

Table of Contents 1

General Product Information 2

Product Identification 2

Thickness – Steel Components 3

Design Stiffening Lip Length 3

General Notes for all Tables 3

Definitions of Structural Property Symbols 4

Section Properties 5

Section Properties Table Notes 5

Non-Structural (S) Stud Section Properties 6

Structural (S) Stud Section Properties 7

Structural (T) Track Section Properties 13

Web Depth to Thickness Ratios 18

Wall Height Tables 19

Interior Non-Structural Non-Composite 19

Interior Non-Structural Composite 23

Limiting Wall Heights –
Curtain Wall Single-Span Table Notes 25

Limiting Wall Heights – Curtain Wall Single-Span 26

Combined Axial and Lateral Load Tables 37

Combined Axial and Lateral Load Table Notes 37

Allowable Axial Loads 38

Floor Joist Span Tables 62

Allowable Floor Joist Span Table Notes 62

Allowable Floor Joist Spans 63

Header Load Tables 76

Header Load Table Notes 76

Header Allowable Uniform Loads 77

Web Crippling Load Tables 81

Web Crippling Load Table Notes 81

Web Crippling Conditions 81

Allowable Web Crippling Loads – Single Members 82

Allowable Web Crippling Loads – Back-to-Back Members 84

Channel Properties 86

U-Channel Section Properties 86

U-Channel Allowable Ceiling Spans 86

(Hat) Furring (F) Channel Section Properties 87

(Hat) Furring (F) Channel Allowable Ceiling Spans 87

Fasteners (Screws and Welds) 89

Allowable Loads for Screw Connections 89

Allowable Loads for Fillet Welds and Flare Groove Welds 90

Typical Details 91

Joist Bridging 91

Strapping Lateral Bracing 92

Suggested Specifications 93

SFIA Information ..... Back Cover

General Product Information

The Steel Framing Industry Association (SFIA) supports the industry standard nomenclature published in the American Iron and Steel Institures's (AISI) General Provisions, S200, The AISI S200 states in Section A5.3 that ..*"structural members and non-structural members shall use a four-part product designator that identifies the size (both web depth and flange width), style, and thickness."* An example of this designator is shown below:

EXAMPLE:

MEMBER DEPTH:

(Example: 3-5/8" = 3.625" ~ 362 x 1/100 inches)
All member depths are taken in 1/100 inches.
For all "T" Sections, member depth is the inside to inside dimension.

FLANGE WIDTH:

(Example: 1-5/8" = 1.625" ~ 162 x 1/100 inches)
All flange widths are taken in 1/100 inches.

362 S 162 - 54

STYLE:

(Example: Stud or Joist section = S)
The five alpha characters utilized by the designator system are:
S = Stud or Joist Sections
T = Track Sections
U = Channel Sections
F = Furring Channel Sections
L = Angle or L-header

MATERIAL THICKNESS:

(Example: 0.054 in = 54 mils; 1 mil = 1/1000 in.)
Material thickness is the minimum base metal thickness in mils. Minimum base metal thickness represents 95% of the design thickness.

NOTE: For Structural members 54 mil (16 gauge) and thicker, that have both 33 and 50 ksi yield strength options shown, the designer shall identify which yield strength he has specified and the manufacturer shall label the product with the yield strength.

General Product Information

SFIA
STEEL FRAMING INDUSTRY ASSOCIATION

Thickness Table

Designation Thickness (Mils)	Minimum Thickness[1] (in)	Design Thickness (in)	Design Inside Corner Radii[2] (in)	Reference Gauge No.
18	0.0179	0.0188	0.0844	25
27	0.0269	0.0283	0.0796	22
30	0.0296	0.0312	0.0782	20-Drywall
33	0.0329	0.0346	0.0765	20-Structural
43	0.0428	0.0451	0.0712	18
54	0.0538	0.0566	0.0849	16
68	0.0677	0.0713	0.1070	14
97	0.0966	0.1017	0.1526	12
118	0.1180	0.1242	0.1863	10

Stiffening Lip Length

Section	Flange Width	Design Stiffening Lip Length (in)
S125	1 1/4"	0.188
S137	1 3/8"	0.375
S162	1 5/8"	0.500
S200	2"	0.625
S250	2 1/2"	0.625
S300	3"	0.625
S350	3 1/2"	1.000

[1] Minimum Thickness represents 95% of the design thickness and is the minimum acceptable thickness delivered to the jobsite based on section A2.4 of the AISI S100-12.

[2] The tables in this catalog are calculated based on inside corner radii listed in this table.

General Notes for all Tables

1. Where AISI S100-12 is referenced, it is the "North American Specification for the Design of Cold-Formed Steel Structural Members", 2012 Edition, with US provisions.

2. The strength increase from cold work of forming has been incorporated for flexural strength per Section A7.2 of AISI S100-12.

3. The effective moment of inertia for deflection is calculated at a stress which results in a section modulus such that the stress times the section modulus at that stress is equal to the allowable moment. AISI S100-12 Specification Procedure 1 for serviceability determination has been used. Increases in the effective moment of Inertia (Ixe) may be possible at lower stress levels. Any modified values would be required to be calculated by a qualified engineer.

4. Various sections may be manufactured with yield points of 33 or 50 ksi. The yield point used for calculations are listed in the tables.

5. For sections available in both 33 and 50 ksi, the specifier must be clearly indicate which yield point is required. For example: 362S162-68 (50ksi).

6. When provided, factory punchouts will be located along the centerline of the webs of the members and will have a minimum center-to-center spacing of 24 inches. Punchouts for members greater that 2.5 inches deep are a maximum of 1.5 inches wide x 4 inches long.

   Members with depths 2.5 inches and smaller are maximum of 3/4 inches wide x 4 inches long.

Definitions of Structural Property Symbols

Gross Properties

Ix: Moment of inertia of gross section about the X-X axis (strong axis).

Sx: Section modulus about the X-X axis (strong axis).

Rx: Radius of gyration of the gross section about the X-X axis.

Iy: Moment of inertia of gross section about the Y-Y axis (weak axis).

Ry: Radius of gyration of the gross section about the Y-Y axis.

Effective Properties

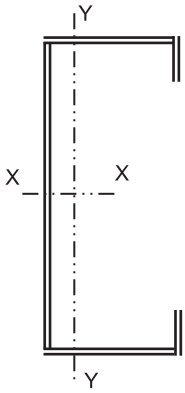

Ixe: Effective moment of inertia about the X-axis.

Sxe: Effective section modulus about the X-X axis (strong axis) stress = Fy.

Ma: Allowable Bending Moment - Based on the effective section modulus and the allowable stress including the strength increase from the cold-work of forming (Section A7.2) where applicable.

Mad: Allowable Bending Moment - Based on Distortional Bucking Strength calculated per AISI section C3.1.4

Vag: Allowable strong axis shear away from punchout, calculated in accordance with AISI Section C3.2.1.

Vanet: Allowable strong axis shear at punchout, calculated in accordance with AISI Section C3.2.2.

Torsional and Other Properties

J: St. Venant Torsional Constant.

Cw: Torsional warping constant.

m: Distance from shear center to mid-plane of web.

Xo: Distance from the shear center to the centroid along the principal X-axis.

Ro: Polar radius of gyration about the centroidal principal axis.

b: $1-(Xo/Ro)^2$

Lu: The longest weak axis (Ly) and torsional (Lt) unbraced length at which lateral torsional buckling is restrained in accordance with AISI C3.1.2.1.

Section Properties Table Notes

1. Calculated properties are based on AISI S100-12, "North American Specification for the Design of Cold-Formed Steel Structural Members."
2. The centerline bend radius is based upon inside corner radii shown in Table as shown on page 3.
3. Effective properties incorporate the strength increase from the cold work of forming as applicable per AISI A7.2.
4. Tabulated gross properties, including torsional properties, are based upon full-unreduced cross section of the studs, away from punchouts.
5. For deflection calculations, use the effective moment of inertia.
6. Allowable moment includes cold-work of forming.
7. For the steels that have both 33 and 50 ksi listing, if the design is based upon 50 ksi, the 50 ksi steel needs to be specified. (Example: 3625 S137 16-50 (50 ksi)).
8. Web depth for track sections is equal to the nominal stud width plus 2 times the design thickness plus the bend radius. Hems on nonstructural track sections are ignored.

SFIA
STEEL FRAMING INDUSTRY ASSOCIATION

Non-Structural (S) Stud Section Properties

					Gross Properties					Effective Properties						Torsional Properties						
Member	Design Thickness (in)	F_y (ksi)	Area (in^2)	Weight (lb/ft)	I_x (in^4)	S_x (in^3)	R_x (in)	I_y (in^4)	R_y (in)	I_x (in^4)	S_x (in^3)	M_a (in-k)	M_{ad} (in-k)	Va_g (lb)	Va_{net} (lb)	J x 1000 (in^4)	C_w (in^6)	X_o (in)	m (in)	R_o (in)	β	L_u (in)
162S125-18	0.0188	33	0.080	0.27	0.038	0.046	0.686	0.016	0.447	0.034	0.031	0.61	0.65	302	100	0.009	0.009	-1.029	0.594	1.315	0.388	29.0
162S125-27	0.0283	33	0.120	0.41	0.056	0.069	0.682	0.023	0.443	0.055	0.053	1.05	1.14	494	106	0.032	0.013	-1.018	0.587	1.303	0.390	29.1
162S125-30	0.0312	33	0.132	0.45	0.061	0.075	0.681	0.026	0.441	0.060	0.060	1.19	1.30	543	106	0.043	0.014	-1.014	0.585	1.299	0.390	29.2
162S125-33	0.0346	33	0.145	0.49	0.067	0.083	0.679	0.028	0.440	0.066	0.069	1.37	1.48	601	105	0.058	0.016	-1.010	0.583	1.294	0.391	29.3
250S125-18	0.0188	33	0.097	0.33	0.099	0.079	1.014	0.019	0.439	0.089	0.060	1.18	1.03	258	196	0.011	0.023	-0.904	0.543	1.428	0.599	29.0
250S125-27	0.0283	33	0.144	0.49	0.147	0.118	1.009	0.027	0.434	0.145	0.098	1.93	1.83	685	344	0.039	0.034	-0.893	0.537	1.416	0.602	28.9
250S125-30	0.0312	33	0.159	0.54	0.161	0.129	1.008	0.030	0.433	0.159	0.110	2.18	2.09	832	378	0.052	0.037	-0.890	0.535	1.413	0.603	28.9
250S125-33	0.0346	33	0.176	0.60	0.178	0.142	1.007	0.033	0.431	0.175	0.126	2.48	2.41	975	399	0.070	0.040	-0.886	0.532	1.409	0.604	28.9
250S125-43	0.0451	33	0.227	0.77	0.228	0.182	1.002	0.041	0.427	0.226	0.177	3.49	3.44	1265	394	0.154	0.050	-0.874	0.526	1.396	0.608	28.9
250S125-54	0.0566	33	0.280	0.95	0.277	0.222	0.994	0.049	0.419	0.277	0.218	4.98	5.08	1553	373	0.299	0.060	-0.859	0.518	1.379	0.612	26.8
250S125-54	0.0566	50	0.280	0.95	0.277	0.222	0.994	0.049	0.419	0.275	0.209	6.26	6.17	2353	565	0.299	0.060	-0.859	0.518	1.379	0.612	23.3
250S125-68	0.0713	33	0.346	1.18	0.335	0.268	0.984	0.058	0.408	0.335	0.267	6.30	6.33	1891	342	0.586	0.072	-0.840	0.508	1.356	0.617	26.6
250S125-68	0.0713	50	0.346	1.18	0.335	0.268	0.984	0.058	0.408	0.335	0.263	7.86	8.01	2866	519	0.586	0.072	-0.840	0.508	1.356	0.617	23.3
350S125-18	0.0188	33	0.115	0.39	0.215	0.123	1.366	0.021	0.423	0.197	0.072	1.42	1.47	180	159	0.014	0.050	-0.798	0.495	1.638	0.763	28.8
350S125-27	0.0283	33	0.173	0.59	0.320	0.183	1.361	0.030	0.419	0.313	0.130	2.57	2.65	614	359	0.046	0.073	-0.788	0.489	1.627	0.766	28.7
350S125-30	0.0312	33	0.190	0.65	0.351	0.201	1.360	0.033	0.417	0.346	0.150	2.97	3.05	824	436	0.062	0.079	-0.784	0.488	1.624	0.767	28.6
350S125-33	0.0346	33	0.210	0.72	0.388	0.222	1.358	0.036	0.416	0.382	0.175	3.46	3.53	1024	487	0.084	0.087	-0.781	0.485	1.621	0.768	28.6
350S125-43	0.0451	33	0.272	0.93	0.498	0.284	1.352	0.046	0.411	0.493	0.258	5.10	5.12	1739	631	0.185	0.109	-0.769	0.479	1.609	0.771	28.5
350S125-54	0.0566	33	0.337	1.15	0.609	0.348	1.344	0.055	0.403	0.609	0.328	6.49	6.87	2253	633	0.360	0.131	-0.755	0.472	1.593	0.775	28.4
350S125-54	0.0566	50	0.337	1.15	0.609	0.348	1.344	0.055	0.403	0.603	0.308	9.23	9.26	3372	947	0.360	0.131	-0.755	0.472	1.593	0.775	22.9
350S125-68	0.0713	33	0.417	1.42	0.739	0.422	1.332	0.064	0.392	0.739	0.409	9.68	9.99	2774	592	0.706	0.156	-0.737	0.462	1.572	0.780	25.8
350S125-68	0.0713	50	0.417	1.42	0.739	0.422	1.332	0.064	0.392	0.739	0.401	12.01	12.55	4203	897	0.706	0.156	-0.737	0.462	1.572	0.780	22.8
362S125-18	0.0188	33	0.118	0.40	0.234	0.129	1.409	0.021	0.421	0.215	0.075	1.48	1.52	173	163	0.014	0.054	-0.786	0.490	1.667	0.778	28.8
362S125-27	0.0283	33	0.176	0.60	0.347	0.192	1.404	0.031	0.416	0.340	0.135	2.67	2.76	592	370	0.047	0.079	-0.776	0.484	1.657	0.781	28.6
362S125-30	0.0312	33	0.194	0.66	0.381	0.210	1.402	0.033	0.415	0.375	0.156	3.09	3.17	794	449	0.063	0.086	-0.773	0.482	1.654	0.782	28.6
362S125-33	0.0346	33	0.215	0.73	0.421	0.232	1.401	0.037	0.413	0.415	0.182	3.60	3.68	1024	521	0.086	0.094	-0.770	0.480	1.651	0.783	28.5
362S125-43	0.0451	33	0.278	0.95	0.541	0.298	1.395	0.046	0.408	0.535	0.269	5.32	5.34	1739	676	0.188	0.118	-0.758	0.474	1.640	0.786	28.4
362S125-54	0.0566	33	0.344	1.17	0.661	0.365	1.386	0.055	0.401	0.661	0.343	6.78	7.20	2341	705	0.367	0.142	-0.744	0.466	1.624	0.790	28.3
362S125-54	0.0566	50	0.344	1.17	0.661	0.365	1.386	0.055	0.401	0.655	0.322	9.63	9.67	3372	1016	0.367	0.142	-0.744	0.466	1.624	0.790	22.8
362S125-68	0.0713	33	0.426	1.45	0.804	0.444	1.374	0.065	0.390	0.804	0.432	8.54	8.76	2884	662	0.721	0.170	-0.726	0.457	1.602	0.795	28.2
362S125-68	0.0713	50	0.426	1.45	0.804	0.444	1.374	0.065	0.390	0.804	0.419	12.56	13.12	4370	1004	0.721	0.170	-0.726	0.457	1.602	0.795	22.7
400S125-181	0.0188	33	0.125	0.42	0.294	0.147	1.536	0.021	0.415	0.273	0.083	1.64	1.69	156	156	0.015	0.068	-0.755	0.475	1.761	0.816	28.7
400S125-27	0.0283	33	0.187	0.64	0.438	0.219	1.531	0.031	0.410	0.428	0.151	2.98	3.07	533	398	0.050	0.098	-0.745	0.469	1.751	0.819	28.5
400S125-30	0.0312	33	0.206	0.70	0.481	0.240	1.529	0.034	0.409	0.473	0.174	3.44	3.54	715	484	0.067	0.108	-0.742	0.467	1.748	0.820	28.5
400S125-33	0.0346	33	0.228	0.77	0.531	0.265	1.527	0.038	0.407	0.523	0.203	4.02	4.11	976	595	0.091	0.118	-0.738	0.465	1.745	0.821	28.4
400S125-43	0.0451	33	0.295	1.00	0.682	0.341	1.522	0.048	0.402	0.676	0.302	5.96	5.99	1739	810	0.200	0.148	-0.727	0.459	1.734	0.824	28.2
400S125-54	0.0566	33	0.365	1.24	0.836	0.418	1.512	0.057	0.394	0.836	0.387	7.65	8.13	2603	944	0.390	0.178	-0.713	0.452	1.718	0.828	28.1
400S125-54	0.0566	50	0.365	1.24	0.836	0.418	1.512	0.057	0.394	0.828	0.362	10.82	10.88	3372	1223	0.390	0.178	-0.713	0.452	1.718	0.828	22.7
400S125-68	0.0713	33	0.452	1.54	1.018	0.509	1.500	0.067	0.383	1.018	0.494	9.76	10.05	3215	895	0.767	0.213	-0.695	0.443	1.697	0.832	28.0
400S125-68	0.0713	50	0.452	1.54	1.018	0.509	1.500	0.067	0.383	1.018	0.475	14.22	14.86	4871	1356	0.767	0.213	-0.695	0.443	1.697	0.832	22.5
550S125-182	0.0188	33	0.153	0.52	0.630	0.229	2.029	0.023	0.390	0.534	0.132	2.61	2.30	112	112	0.018	0.141	-0.651	0.423	2.166	0.910	28.2
550S125-27	0.0283	33	0.229	0.78	0.939	0.341	2.023	0.034	0.385	0.898	0.246	4.87	4.27	382	382	0.061	0.205	-0.642	0.417	2.158	0.912	27.9
550S125-30	0.0312	33	0.252	0.86	1.032	0.375	2.022	0.037	0.384	0.996	0.286	5.65	4.95	512	512	0.082	0.224	-0.639	0.416	2.155	0.912	27.9
550S125-33	0.0346	33	0.279	0.95	1.140	0.415	2.020	0.041	0.382	1.112	0.335	6.63	5.79	699	699	0.112	0.246	-0.636	0.414	2.152	0.913	27.8
550S125-43	0.0451	33	0.362	1.23	1.469	0.534	2.013	0.052	0.377	1.458	0.500	9.89	8.62	1550	1199	0.246	0.309	-0.626	0.408	2.142	0.915	27.6
550S125-54	0.0566	33	0.450	1.53	1.806	0.657	2.003	0.062	0.370	1.805	0.647	12.79	11.94	2739	1666	0.481	0.374	-0.613	0.401	2.127	0.917	27.3
550S125-54	0.0566	50	0.450	1.53	1.806	0.657	2.003	0.062	0.370	1.791	0.606	18.15	15.78	3093	1881	0.481	0.374	-0.613	0.401	2.127	0.917	22.1
550S125-68	0.0713	33	0.559	1.90	2.210	0.804	1.988	0.072	0.359	2.210	0.801	18.94	18.61	4347	2057	0.948	0.448	-0.597	0.392	2.106	0.920	24.7
550S125-68	0.0713	50	0.559	1.90	2.210	0.804	1.988	0.072	0.359	2.210	0.792	23.72	22.00	5350	2532	0.948	0.448	-0.597	0.392	2.106	0.920	21.9
600S125-182	0.0188	33	0.162	0.55	0.779	0.260	2.190	0.024	0.382	0.648	0.145	2.86	2.48	102	102	0.019	0.172	-0.623	0.408	2.308	0.927	28.0
600S125-271	0.0283	33	0.243	0.83	1.161	0.387	2.184	0.035	0.378	1.097	0.271	5.35	4.64	349	349	0.065	0.251	-0.614	0.403	2.300	0.929	27.7
600S125-30	0.0312	33	0.268	0.91	1.276	0.425	2.182	0.038	0.376	1.219	0.315	6.22	5.40	468	468	0.087	0.274	-0.611	0.401	2.297	0.929	27.7
600S125-33	0.0346	33	0.297	1.01	1.410	0.470	2.180	0.042	0.375	1.361	0.370	7.31	6.32	638	638	0.118	0.300	-0.608	0.399	2.294	0.930	27.6
600S125-43	0.0451	33	0.385	1.31	1.818	0.606	2.173	0.053	0.370	1.807	0.555	10.97	9.47	1416	1240	0.261	0.379	-0.598	0.393	2.284	0.931	27.3
600S125-54	0.0566	33	0.479	1.63	2.237	0.746	2.162	0.063	0.362	2.236	0.728	14.38	13.19	2739	1890	0.511	0.457	-0.586	0.386	2.269	0.933	27.1
600S125-54	0.0566	50	0.479	1.63	2.237	0.746	2.162	0.063	0.362	2.220	0.674	20.17	17.37	2823	1947	0.511	0.457	-0.586	0.386	2.269	0.933	21.9
600S125-68	0.0713	33	0.595	2.02	2.742	0.914	2.146	0.073	0.351	2.741	0.911	21.54	20.67	4347	2339	1.008	0.549	-0.570	0.378	2.249	0.936	24.4
600S125-68	0.0713	50	0.595	2.02	2.742	0.914	2.146	0.073	0.351	2.741	0.899	26.93	24.37	5350	2879	1.008	0.549	-0.570	0.378	2.249	0.936	21.6
800S125-331	0.0346	33	0.366	1.24	2.883	0.721	2.807	0.044	0.347	2.657	0.508	10.03	8.23	474	474	0.146	0.583	-0.519	0.350	2.875	0.967	26.6
800S125-43	0.0451	33	0.475	1.62	3.723	0.931	2.799	0.056	0.342	3.583	0.773	15.28	12.58	1051	1051	0.322	0.735	-0.510	0.344	2.866	0.968	26.4
800S125-54	0.0566	33	0.592	2.01	4.596	1.149	2.787	0.066	0.335	4.568	1.035	20.46	17.89	2091	2091	0.632	0.890	-0.500	0.338	2.851	0.969	26.0
800S125-54	0.0566	50	0.592	2.01	4.596	1.149	2.787	0.066	0.335	4.432	0.943	28.23	23.21	2091	2091	0.632	0.890	-0.500	0.338	2.851	0.969	21.1
800S125-68	0.0713	33	0.738	2.51	5.656	1.414	2.769	0.078	0.325	5.654	1.379	27.26	25.24	4221	3367	1.250	1.069	-0.485	0.330	2.830	0.971	25.6
800S125-68	0.0713	50	0.738	2.51	5.656	1.414	2.769	0.078	0.325	5.643	1.290	38.61	33.26	4221	3367	1.250	1.069	-0.485	0.330	2.830	0.971	20.8

[1] Web-height to thickness ratio exceeds 200. Web Stiffeners are required at all support points and concentrated loads.

[2] When web height-to thickness ratio exceeds 260, or flange width-to-thickness rato exceeds 60, effective properties are not calculated (limitations in AISI Section B1).

See Section Properties Table Notes on page 5.

SFIA
STEEL FRAMING INDUSTRY ASSOCIATION

Structural (S) Stud Section Properties

					Gross Properties					Effective Properties						Torsional Properties						
Member	Design Thickness (in)	F_y (ksi)	Area (in^2)	Weight (lb/ft)	I_x (in^4)	S_x (in^3)	R_x (in)	I_y (in^4)	R_y (in)	I_x (in^4)	S_x (in^3)	M_a (in-k)	M_{ad} (in-k)	Va_g (lb)	Va_{net} (lb)	J x 1000 (in^4)	C_w (in^6)	X_o (in)	m (in)	R_o (in)	β	L_u (in)
250S137-33	0.0346	33	0.197	0.67	0.203	0.163	1.015	0.052	0.515	0.203	0.158	3.11	3.09	975	399	0.079	0.076	-1.141	0.677	1.612	0.499	35.6
250S137-43	0.0451	33	0.255	0.87	0.261	0.208	1.011	0.067	0.511	0.261	0.205	4.53	4.60	1265	394	0.173	0.096	-1.129	0.670	1.599	0.501	33.6
250S137-54	0.0566	33	0.316	1.07	0.318	0.255	1.004	0.080	0.504	0.318	0.255	5.76	5.76	1553	373	0.337	0.115	-1.115	0.663	1.583	0.504	33.4
250S137-54	0.0566	50	0.316	1.07	0.318	0.255	1.004	0.080	0.504	0.318	0.244	8.22	8.34	2353	565	0.337	0.115	-1.115	0.663	1.583	0.504	27.1
250S137-68	0.0713	33	0.390	1.33	0.386	0.309	0.995	0.096	0.495	0.386	0.309	7.20	7.20	1891	342	0.661	0.138	-1.096	0.653	1.561	0.507	33.1
250S137-68	0.0713	50	0.390	1.33	0.386	0.309	0.995	0.096	0.495	0.386	0.308	10.66	10.68	2866	519	0.661	0.138	-1.096	0.653	1.561	0.507	26.8
250S162-33	0.0346	33	0.223	0.76	0.235	0.188	1.027	0.087	0.624	0.235	0.180	3.55	3.56	975	399	0.089	0.146	-1.470	0.859	1.898	0.401	44.1
250S162-43	0.0451	33	0.289	0.98	0.302	0.242	1.022	0.111	0.620	0.302	0.240	5.22	5.25	1265	394	0.196	0.184	-1.457	0.852	1.885	0.402	42.1
250S162-54	0.0566	33	0.358	1.22	0.370	0.296	1.016	0.135	0.613	0.370	0.296	6.57	6.57	1553	373	0.383	0.223	-1.443	0.845	1.868	0.404	41.8
250S162-54	0.0566	50	0.358	1.22	0.370	0.296	1.016	0.135	0.613	0.370	0.284	9.42	9.46	2353	565	0.383	0.223	-1.443	0.845	1.868	0.404	33.9
250S162-68	0.0713	33	0.443	1.51	0.450	0.360	1.008	0.162	0.605	0.450	0.360	8.21	8.21	1891	342	0.752	0.268	-1.424	0.835	1.847	0.405	41.7
250S162-68	0.0713	50	0.443	1.51	0.450	0.360	1.008	0.162	0.605	0.450	0.357	12.11	12.21	2866	519	0.752	0.268	-1.424	0.835	1.847	0.405	33.7
350S162-33	0.0346	33	0.258	0.88	0.508	0.291	1.404	0.098	0.617	0.508	0.257	5.09	5.22	1024	487	0.103	0.277	-1.324	0.796	2.026	0.573	42.7
350S162-43	0.0451	33	0.334	1.14	0.655	0.374	1.400	0.125	0.612	0.654	0.357	7.05	7.31	1739	631	0.227	0.350	-1.312	0.789	2.014	0.575	42.6
350S162-54	0.0566	33	0.415	1.41	0.805	0.460	1.393	0.152	0.606	0.804	0.447	8.83	9.08	2253	633	0.443	0.426	-1.298	0.782	1.998	0.578	42.7
350S162-54	0.0566	50	0.415	1.41	0.805	0.460	1.393	0.152	0.606	0.804	0.426	12.74	13.05	3372	947	0.443	0.426	-1.298	0.782	1.998	0.578	34.5
350S162-68	0.0713	33	0.515	1.75	0.985	0.563	1.383	0.184	0.597	0.985	0.551	12.57	12.83	2774	592	0.872	0.514	-1.280	0.772	1.977	0.581	39.7
350S162-68	0.0713	50	0.515	1.75	0.985	0.563	1.383	0.184	0.597	0.985	0.549	16.44	16.85	4203	897	0.872	0.514	-1.280	0.772	1.977	0.581	34.5
350S162-97	0.1017	33	0.711	2.42	1.321	0.755	1.363	0.238	0.579	1.321	0.739	17.72	14.92	3765	511	2.452	0.672	-1.242	0.752	1.932	0.587	43.6
350S162-97	0.1017	50	0.711	2.42	1.321	0.755	1.363	0.238	0.579	1.321	0.739	26.20	22.60	5705	775	2.452	0.672	-1.242	0.752	1.932	0.587	34.7
350S200-43	0.0451	33	0.379	1.29	0.771	0.441	1.426	0.224	0.768	0.771	0.410	8.09	8.36	1739	631	0.257	0.687	-1.748	1.032	2.383	0.462	53.7
350S200-54	0.0566	33	0.471	1.60	0.950	0.543	1.420	0.274	0.762	0.950	0.530	10.48	10.73	2253	633	0.503	0.838	-1.733	1.024	2.367	0.464	53.8
350S200-54	0.0566	50	0.471	1.60	0.950	0.543	1.420	0.274	0.762	0.950	0.470	14.07	14.87	3372	947	0.503	0.838	-1.733	1.024	2.367	0.464	43.5
350S200-68	0.0713	33	0.586	1.99	1.167	0.667	1.411	0.333	0.754	1.167	0.655	14.59	13.18	2774	592	0.993	1.018	-1.715	1.014	2.345	0.465	54.1
350S200-68	0.0713	50	0.586	1.99	1.167	0.667	1.411	0.333	0.754	1.167	0.638	19.11	19.68	4203	897	0.993	1.018	-1.715	1.014	2.345	0.465	43.5
350S200-97	0.1017	33	0.813	2.77	1.577	0.901	1.393	0.440	0.736	1.577	0.885	20.58	17.81	3765	511	2.803	1.347	-1.676	0.994	2.300	0.469	55.0
350S200-97	0.1017	50	0.813	2.77	1.577	0.901	1.393	0.440	0.736	1.577	0.885	30.53	26.98	5705	775	2.803	1.347	-1.676	0.994	2.300	0.469	43.9
362S137-33	0.0346	33	0.236	0.80	0.479	0.264	1.424	0.059	0.501	0.479	0.232	4.59	4.73	1024	521	0.094	0.165	-1.003	0.615	1.813	0.694	34.7
362S137-43	0.0451	33	0.306	1.04	0.616	0.340	1.419	0.075	0.497	0.616	0.320	6.33	6.66	1739	676	0.207	0.208	-0.991	0.608	1.801	0.697	34.6
362S137-54	0.0566	33	0.379	1.29	0.756	0.417	1.412	0.091	0.490	0.756	0.402	7.95	8.24	2341	705	0.405	0.251	-0.978	0.601	1.786	0.700	34.6
362S137-54	0.0566	50	0.379	1.29	0.756	0.417	1.412	0.091	0.490	0.756	0.382	11.42	11.91	3372	1016	0.405	0.251	-0.978	0.601	1.786	0.700	27.9
362S137-68	0.0713	33	0.470	1.60	0.923	0.509	1.401	0.109	0.481	0.923	0.498	9.84	10.06	2884	662	0.797	0.302	-0.959	0.592	1.765	0.704	34.6
362S137-68	0.0713	50	0.470	1.60	0.923	0.509	1.401	0.109	0.481	0.923	0.493	14.77	15.24	4370	1004	0.797	0.302	-0.959	0.592	1.765	0.704	27.8
362S162-33	0.0346	33	0.262	0.89	0.551	0.304	1.450	0.099	0.616	0.551	0.268	5.29	5.43	1024	521	0.105	0.297	-1.308	0.789	2.048	0.592	42.6
362S162-43	0.0451	33	0.340	1.16	0.710	0.392	1.445	0.127	0.611	0.710	0.372	7.34	7.62	1739	676	0.230	0.376	-1.297	0.782	2.036	0.594	42.5
362S162-54	0.0566	33	0.422	1.44	0.873	0.482	1.438	0.154	0.605	0.873	0.467	9.22	9.52	2341	705	0.451	0.457	-1.283	0.774	2.020	0.597	42.5
362S162-54	0.0566	50	0.422	1.44	0.873	0.482	1.438	0.154	0.605	0.873	0.444	13.28	13.60	3372	1016	0.451	0.457	-1.283	0.774	2.020	0.597	34.4
362S162-68	0.0713	33	0.524	1.78	1.069	0.590	1.429	0.186	0.596	1.069	0.579	11.43	11.65	2884	662	0.887	0.552	-1.264	0.765	1.999	0.600	42.7
362S162-68	0.0713	50	0.524	1.78	1.069	0.590	1.429	0.186	0.596	1.069	0.574	17.19	17.66	4370	1004	0.887	0.552	-1.264	0.765	1.999	0.600	34.4
362S162-97	0.1017	33	0.724	2.46	1.436	0.792	1.408	0.241	0.577	1.436	0.776	18.63	15.65	3922	577	2.496	0.723	-1.226	0.745	1.954	0.606	43.3
362S162-97	0.1017	50	0.724	2.46	1.436	0.792	1.408	0.241	0.577	1.436	0.776	27.54	23.71	5943	875	2.496	0.723	-1.226	0.745	1.954	0.606	34.5
362S200-33	0.0346	33	0.297	1.01	0.648	0.358	1.478	0.177	0.772	0.642	0.294	5.81	6.19	1024	521	0.118	0.577	-1.741	1.030	2.411	0.478	53.6
362S200-43	0.0451	33	0.385	1.31	0.836	0.461	1.474	0.227	0.767	0.836	0.427	8.43	8.70	1739	676	0.261	0.734	-1.729	1.024	2.398	0.480	53.5
362S200-54	0.0566	33	0.479	1.63	1.030	0.568	1.467	0.277	0.761	1.030	0.553	10.93	11.23	2341	705	0.511	0.896	-1.715	1.016	2.382	0.482	53.6
362S200-54	0.0566	50	0.479	1.63	1.030	0.568	1.467	0.277	0.761	1.030	0.490	14.66	15.48	3372	1016	0.511	0.896	-1.715	1.016	2.382	0.482	43.3
362S200-68	0.0713	33	0.595	2.02	1.266	0.698	1.458	0.337	0.753	1.266	0.687	15.29	15.54	2884	662	1.008	1.089	-1.696	1.006	2.360	0.484	50.6
362S200-68	0.0713	50	0.595	2.02	1.266	0.698	1.458	0.337	0.753	1.266	0.666	19.95	20.52	4370	1004	1.008	1.089	-1.696	1.006	2.360	0.484	43.3
362S200-97	0.1017	33	0.826	2.81	1.712	0.945	1.440	0.446	0.735	1.712	0.929	21.60	18.66	3922	577	2.847	1.441	-1.658	0.986	2.316	0.487	54.7
362S200-97	0.1017	50	0.826	2.81	1.712	0.945	1.440	0.446	0.735	1.712	0.929	32.04	28.28	5943	875	2.847	1.441	-1.658	0.986	2.316	0.487	43.6
362S250-332	0.0346	33	0.331	1.13	0.760	0.419	1.514	0.299	0.951				6.59	1024	521	0.132	0.965	-2.211	1.284	2.844	0.395	64.2
362S250-43	0.0451	33	0.430	1.46	0.980	0.541	1.510	0.385	0.946	0.980	0.449	8.88	9.36	1739	676	0.292	1.230	-2.199	1.277	2.830	0.396	64.1
362S250-54	0.0566	33	0.535	1.82	1.210	0.668	1.504	0.473	0.940	1.210	0.582	11.51	12.46	2341	705	0.571	1.506	-2.184	1.269	2.813	0.397	64.3
362S250-54	0.0566	50	0.535	1.82	1.210	0.668	1.504	0.473	0.940	1.198	0.514	15.40	16.55	3372	1016	0.571	1.506	-2.184	1.269	2.813	0.397	52.0
362S250-68	0.0713	33	0.666	2.27	1.491	0.823	1.496	0.578	0.931	1.491	0.782	17.03	16.25	2884	662	1.129	1.837	-2.165	1.259	2.791	0.398	64.6
362S250-68	0.0713	50	0.666	2.27	1.491	0.823	1.496	0.578	0.931	1.491	0.689	20.64	22.18	4370	1004	1.129	1.837	-2.165	1.259	2.791	0.398	52.0
362S250-97	0.1017	33	0.927	3.16	2.028	1.119	1.479	0.773	0.913	2.028	1.103	24.91	22.11	3922	577	3.197	2.452	-2.126	1.239	2.746	0.401	65.7
362S250-97	0.1017	50	0.927	3.16	2.028	1.119	1.479	0.773	0.913	2.028	1.056	35.51	33.49	5943	875	3.197	2.452	-2.126	1.239	2.746	0.401	52.5
362S300-332	0.0346	33	0.366	1.24	0.871	0.481	1.543	0.463	1.125				6.89	1024	521	0.146	1.478	-2.686	1.537	3.296	0.336	74.3
362S300-432	0.0451	33	0.475	1.62	1.125	0.621	1.539	0.596	1.120				9.85	1739	676	0.322	1.888	-2.674	1.530	3.282	0.336	74.3
362S300-54	0.0566	33	0.592	2.01	1.391	0.767	1.533	0.734	1.114	1.379	0.607	11.99	13.22	2341	705	0.632	2.316	-2.659	1.522	3.265	0.337	74.5
362S300-54	0.0566	50	0.592	2.01	1.391	0.767	1.533	0.734	1.114	1.295	0.529	15.83	17.35	3372	1016	0.632	2.316	-2.659	1.522	3.265	0.337	60.2
362S300-68	0.0713	33	0.738	2.51	1.716	0.947	1.525	0.900	1.105	1.715	0.811	16.02	17.65	2884	662	1.250	2.833	-2.640	1.512	3.243	0.337	74.9
362S300-68	0.0713	50	0.738	2.51	1.716	0.947	1.525	0.900	1.105	1.681	0.716	21.45	23.43	4370	1004	1.250	2.833	-2.640	1.512	3.243	0.337	60.4
362S300-97	0.1017	33	1.029	3.50	2.343	1.293	1.509	1.213	1.086	2.343	1.226	27.15	25.55	3922	577	3.548	3.803	-2.600	1.491	3.196	0.338	76.2
362S300-97	0.1017	50	1.029	3.50	2.343	1.293	1.509	1.213	1.086	2.318	1.150	34.44	36.43	5943	875	3.548	3.803	-2.600	1.491	3.196	0.338	60.9

[1] Web-height-to-thickness ratio exceeds 200. Web Stiffeners are required at all support points and concentric loads. Suitability of web holes must be evaluated independently.

[2] When web height-to thickness ratio exceeds 260, or flange width-to-thickness ratio exceeds 60, effective properties are not calculated (limitations in AISI Section B1).

See Section Properties Table Notes on page 5.

SFIA
STEEL FRAMING INDUSTRY ASSOCIATION

Structural (S) Stud Section Properties

					Gross Properties					Effective Properties						Torsional Properties						
Member	Design Thickness (in)	F_y (ksi)	Area (in^2)	Weight (lb/ft)	I_x (in^4)	S_x (in^3)	R_x (in)	I_y (in^4)	R_y (in)	I_x (in^4)	S_x (in^3)	M_a (in-k)	M_{ad} (in-k)	Va_q (lb)	Va_{net} (lb)	J x 1000 (in^4)	C_w (in^6)	X_o (in)	m (in)	R_o (in)	β	L_u (in)
400S137-33	0.0346	33	0.249	0.85	0.603	0.302	1.556	0.061	0.496	0.603	0.259	5.12	5.29	976	595	0.099	0.204	-0.965	0.597	1.897	0.741	34.5
400S137-43	0.0451	33	0.323	1.10	0.776	0.388	1.551	0.078	0.491	0.776	0.359	7.09	7.47	1739	810	0.219	0.257	-0.954	0.591	1.886	0.744	34.3
400S137-54	0.0566	33	0.401	1.36	0.953	0.477	1.543	0.094	0.484	0.953	0.453	8.96	9.42	2603	944	0.428	0.311	-0.940	0.583	1.870	0.747	34.3
400S137-54	0.0566	50	0.401	1.36	0.953	0.477	1.543	0.094	0.484	0.953	0.428	12.82	13.38	3372	1223	0.428	0.311	-0.940	0.583	1.870	0.747	27.7
400S137-68	0.0713	33	0.497	1.69	1.165	0.583	1.531	0.112	0.475	1.165	0.568	11.22	11.51	3215	895	0.842	0.375	-0.922	0.574	1.850	0.751	34.2
400S137-68	0.0713	50	0.497	1.69	1.165	0.583	1.531	0.112	0.475	1.165	0.558	16.70	17.44	4871	1356	0.842	0.375	-0.922	0.574	1.850	0.751	27.6
400S162-33	0.0346	33	0.275	0.94	0.692	0.346	1.586	0.103	0.611	0.692	0.299	5.91	6.07	976	595	0.110	0.363	-1.263	0.768	2.118	0.644	42.3
400S162-43	0.0451	33	0.357	1.21	0.892	0.446	1.581	0.131	0.606	0.892	0.417	8.23	8.55	1739	810	0.242	0.460	-1.252	0.761	2.106	0.647	42.2
400S162-54	0.0566	33	0.443	1.51	1.098	0.549	1.574	0.159	0.600	1.098	0.526	10.39	10.85	2603	944	0.473	0.560	-1.238	0.754	2.090	0.649	42.2
400S162-54	0.0566	50	0.443	1.51	1.098	0.549	1.574	0.159	0.600	1.098	0.498	14.90	15.25	3372	1223	0.473	0.560	-1.238	0.754	2.090	0.649	34.1
400S162-68	0.0713	33	0.550	1.87	1.346	0.673	1.564	0.192	0.591	1.346	0.658	13.00	13.30	3215	895	0.933	0.677	-1.220	0.745	2.069	0.653	42.2
400S162-68	0.0713	50	0.550	1.87	1.346	0.673	1.564	0.192	0.591	1.346	0.648	19.41	20.16	4871	1356	0.933	0.677	-1.220	0.745	2.069	0.653	34.0
400S162-97	0.1017	33	0.762	2.59	1.813	0.907	1.542	0.250	0.572	1.813	0.892	21.41	17.92	4394	797	2.628	0.889	-1.182	0.725	2.026	0.660	42.6
400S162-97	0.1017	50	0.762	2.59	1.813	0.907	1.542	0.250	0.572	1.813	0.892	31.65	27.15	6658	1207	2.628	0.889	-1.182	0.725	2.026	0.660	34.1
400S200-33	0.0346	33	0.310	1.05	0.812	0.406	1.619	0.183	0.769	0.804	0.329	6.49	6.90	976	595	0.124	0.697	-1.688	1.007	2.462	0.530	53.1
400S200-43	0.0451	33	0.402	1.37	1.048	0.524	1.615	0.235	0.764	1.048	0.478	9.45	9.74	1739	810	0.272	0.886	-1.676	1.000	2.450	0.532	53.0
400S200-54	0.0566	33	0.500	1.70	1.292	0.646	1.608	0.287	0.758	1.292	0.623	12.30	12.77	2603	944	0.534	1.083	-1.662	0.993	2.433	0.534	53.0
400S200-54	0.0566	50	0.500	1.70	1.292	0.646	1.608	0.287	0.758	1.292	0.549	16.43	17.32	3372	1223	0.534	1.083	-1.662	0.993	2.433	0.534	42.9
400S200-68	0.0713	33	0.622	2.12	1.590	0.795	1.599	0.349	0.750	1.589	0.780	15.41	15.71	3215	895	1.054	1.318	-1.643	0.983	2.412	0.536	53.2
400S200-68	0.0713	50	0.622	2.12	1.590	0.795	1.599	0.349	0.750	1.589	0.751	22.48	23.04	4871	1356	1.054	1.318	-1.643	0.983	2.412	0.536	42.9
400S200-97	0.1017	33	0.864	2.94	2.156	1.078	1.580	0.463	0.732	2.156	1.064	24.73	21.30	4394	797	2.978	1.749	-1.605	0.963	2.368	0.541	53.8
400S200-97	0.1017	50	0.864	2.94	2.156	1.078	1.580	0.463	0.732	2.156	1.064	36.69	32.27	6658	1207	2.978	1.749	-1.605	0.963	2.368	0.541	43.1
400S250-33[2]	0.0346	33	0.344	1.17	0.948	0.474	1.660	0.310	0.949							0.137	1.165	-2.151	1.259	2.878	0.441	63.7
400S250-43	0.0451	33	0.447	1.52	1.224	0.612	1.655	0.399	0.945	1.224	0.503	9.93	10.42	1739	810	0.303	1.486	-2.139	1.252	2.865	0.443	63.7
400S250-54	0.0566	33	0.556	1.89	1.512	0.756	1.649	0.490	0.938	1.512	0.653	12.91	13.92	2603	944	0.594	1.821	-2.124	1.244	2.848	0.444	63.8
400S250-54	0.0566	50	0.556	1.89	1.512	0.756	1.649	0.490	0.938	1.496	0.576	17.24	18.43	3372	1223	0.594	1.821	-2.124	1.244	2.848	0.444	51.6
400S250-68	0.0713	33	0.693	2.36	1.865	0.932	1.640	0.599	0.929	1.865	0.883	17.45	18.42	3215	895	1.174	2.225	-2.105	1.235	2.826	0.445	64.0
400S250-68	0.0713	50	0.693	2.36	1.865	0.932	1.640	0.599	0.929	1.865	0.775	23.20	24.77	4871	1356	1.174	2.225	-2.105	1.235	2.826	0.445	51.6
400S250-97	0.1017	33	0.966	3.28	2.542	1.271	1.623	0.801	0.911	2.542	1.257	28.39	25.12	4394	797	3.329	2.978	-2.066	1.214	2.781	0.448	64.8
400S250-97	0.1017	50	0.966	3.28	2.542	1.271	1.623	0.801	0.911	2.542	1.202	40.44	38.05	6658	1207	3.329	2.978	-2.066	1.214	2.781	0.448	51.9
400S300-33[2]	0.0346	33	0.379	1.29	1.084	0.542	1.692	0.479	1.125							0.151	1.786	-2.621	1.510	3.316	0.375	73.9
400S300-43[2]	0.0451	33	0.492	1.67	1.400	0.700	1.687	0.617	1.120							0.334	2.282	-2.608	1.503	3.302	0.376	73.9
400S300-54	0.0566	33	0.613	2.09	1.732	0.866	1.681	0.760	1.114	1.717	0.680	13.44	14.70	2603	944	0.655	2.802	-2.594	1.496	3.285	0.377	74.0
400S300-54	0.0566	50	0.613	2.09	1.732	0.866	1.681	0.760	1.114	1.612	0.592	17.72	19.25	3372	1223	0.655	2.802	-2.594	1.496	3.285	0.377	59.9
400S300-68	0.0713	33	0.764	2.60	2.140	1.070	1.673	0.933	1.105	2.138	0.914	18.07	19.68	3215	895	1.295	3.432	-2.574	1.486	3.263	0.378	74.3
400S300-68	0.0713	50	0.764	2.60	2.140	1.070	1.673	0.933	1.105	2.094	0.805	24.10	26.06	4871	1356	1.295	3.432	-2.574	1.486	3.263	0.378	60.0
400S300-97	0.1017	33	1.067	3.63	2.928	1.464	1.656	1.259	1.086	2.929	1.391	30.80	28.93	4394	797	3.679	4.619	-2.535	1.465	3.217	0.379	75.3
400S300-97	0.1017	50	1.067	3.63	2.928	1.464	1.656	1.259	1.086	2.894	1.307	39.13	40.74	6658	1207	3.679	4.619	-2.535	1.465	3.217	0.379	60.3
550S162-33	0.0346	33	0.327	1.11	1.459	0.530	2.112	0.113	0.589	1.459	0.512	10.11	8.63	699	699	0.130	0.713	-1.114	0.697	2.459	0.795	41.4
550S162-43	0.0451	33	0.424	1.44	1.884	0.685	2.107	0.145	0.584	1.883	0.681	14.80	13.14	1550	1199	0.288	0.905	-1.103	0.691	2.449	0.797	41.2
550S162-54	0.0566	33	0.528	1.80	2.325	0.845	2.098	0.176	0.577	2.324	0.845	18.76	17.88	2739	1666	0.564	1.105	-1.090	0.684	2.434	0.800	41.0
550S162-54	0.0566	50	0.528	1.80	2.325	0.845	2.098	0.176	0.577	2.324	0.811	26.86	23.53	3093	1881	0.564	1.105	-1.090	0.684	2.434	0.800	33.2
550S162-68	0.0713	33	0.657	2.24	2.862	1.041	2.087	0.212	0.569	2.861	1.041	23.72	23.73	4347	2057	1.114	1.342	-1.072	0.675	2.414	0.803	40.9
550S162-68	0.0713	50	0.657	2.24	2.862	1.041	2.087	0.212	0.569	2.861	1.031	34.95	32.30	5350	2532	1.114	1.342	-1.072	0.675	2.414	0.803	33.1
550S162-97	0.1017	33	0.915	3.11	3.887	1.414	2.062	0.276	0.550	3.887	1.413	33.92	33.92	6282	1997	3.154	1.775	-1.037	0.656	2.372	0.809	40.8
550S162-97	0.1017	50	0.915	3.11	3.887	1.414	2.062	0.276	0.550	3.887	1.413	50.14	50.14	9518	3026	3.154	1.775	-1.037	0.656	2.372	0.809	32.8
550S200-33	0.0346	33	0.362	1.23	1.694	0.616	2.164	0.204	0.751	1.678	0.559	11.05	9.80	699	699	0.144	1.326	-1.508	0.925	2.743	0.698	51.9
550S200-43	0.0451	33	0.469	1.60	2.189	0.796	2.159	0.261	0.746	2.189	0.776	15.34	13.97	1550	1199	0.318	1.691	-1.496	0.918	2.731	0.700	51.7
550S200-54	0.0566	33	0.585	1.99	2.707	0.984	2.152	0.320	0.739	2.707	0.984	21.41	18.67	2739	1666	0.624	2.072	-1.483	0.911	2.716	0.702	51.6
550S200-54	0.0566	50	0.585	1.99	2.707	0.984	2.152	0.320	0.739	2.707	0.901	26.99	24.85	3093	1881	0.624	2.072	-1.483	0.911	2.716	0.702	41.8
550S200-68	0.0713	33	0.729	2.48	3.341	1.215	2.141	0.389	0.731	3.341	1.215	27.03	27.04	4347	2057	1.235	2.531	-1.465	0.902	2.695	0.705	51.6
550S200-68	0.0713	50	0.729	2.48	3.341	1.215	2.141	0.389	0.731	3.341	1.188	39.44	33.46	5350	2532	1.235	2.531	-1.465	0.902	2.695	0.705	41.7
550S200-97	0.1017	33	1.016	3.46	4.565	1.660	2.119	0.516	0.713	4.564	1.660	38.59	38.59	6282	1997	3.504	3.384	-1.428	0.882	2.653	0.710	51.6
550S200-97	0.1017	50	1.016	3.46	4.565	1.660	2.119	0.516	0.713	4.564	1.660	57.26	57.27	9518	3026	3.504	3.384	-1.428	0.882	2.653	0.710	41.5
600S137-33	0.0346	33	0.318	1.08	1.583	0.528	2.230	0.069	0.464	1.548	0.455	8.98	8.19	638	638	0.127	0.500	-0.807	0.519	2.416	0.889	33.5
600S137-43	0.0451	33	0.413	1.41	2.042	0.681	2.224	0.087	0.459	2.041	0.645	12.74	11.83	1416	1240	0.280	0.633	-0.796	0.513	2.406	0.890	33.3
600S137-54	0.0566	33	0.514	1.75	2.518	0.839	2.214	0.105	0.452	2.518	0.832	16.45	15.96	2739	1890	0.549	0.769	-0.784	0.506	2.392	0.893	33.0
600S137-54	0.0566	50	0.514	1.75	2.518	0.839	2.214	0.105	0.452	2.518	0.777	23.26	21.25	2823	1947	0.549	0.769	-0.784	0.506	2.392	0.893	26.8
600S137-68	0.0713	33	0.640	2.18	3.095	1.032	2.200	0.125	0.443	3.095	1.032	24.05	20.39	4347	2339	1.084	0.930	-0.768	0.497	2.372	0.895	32.8
600S137-68	0.0713	50	0.640	2.18	3.095	1.032	2.200	0.125	0.443	3.095	1.030	30.85	28.91	5350	2879	1.084	0.930	-0.768	0.497	2.372	0.895	26.5
600S137-97	0.1017	33	0.889	3.03	4.190	1.397	2.171	0.159	0.423	4.189	1.396	34.49	34.50	6911	2512	3.066	1.216	-0.734	0.480	2.330	0.901	32.4
600S137-97	0.1017	50	0.889	3.03	4.190	1.397	2.171	0.159	0.423	4.189	1.396	50.81	50.82	10472	3806	3.066	1.216	-0.734	0.480	2.330	0.901	26.1

[1] Web-height-to-thickness ratio exceeds 200. Web Stiffeners are required at all support points and concentric loads. Suitability of web holes must be evaluated independently.

[2] When web height-to thickness ratio exceeds 260, or flange width-to-thickness ratio exceeds 60, effective properties are not calculated (limitations in AISI Section B1).

See Section Properties Table Notes on page 5.

SFIA
STEEL FRAMING INDUSTRY ASSOCIATION

Structural (S) Stud Section Properties

					Gross Properties					Effective Properties						Torsional Properties						
Member	Design Thickness (in)	F_y (ksi)	Area (in^2)	Weight (lb/ft)	I_x (in^4)	S_x (in^3)	R_x (in)	I_y (in^4)	R_y (in)	I_x (in^4)	S_x (in^3)	M_a (in-k)	M_{ad} (in-k)	Va_g (lb)	Va_{net} (lb)	J x 1000 (in^4)	C_w (in^6)	X_o (in)	m (in)	R_o (in)	β	L_u (in)
600S162-33	0.0346	33	0.344	1.17	1.793	0.598	2.282	0.116	0.581	1.793	0.577	11.41	9.47	638	638	0.137	0.861	-1.072	0.677	2.588	0.828	41.1
600S162-43	0.0451	33	0.447	1.52	2.316	0.772	2.277	0.148	0.576	2.316	0.767	16.68	14.47	1416	1240	0.303	1.095	-1.062	0.670	2.577	0.830	40.9
600S162-54	0.0566	33	0.556	1.89	2.861	0.954	2.268	0.180	0.570	2.860	0.953	21.17	19.76	2739	1890	0.594	1.337	-1.049	0.663	2.563	0.833	40.7
600S162-54	0.0566	50	0.556	1.89	2.861	0.954	2.268	0.180	0.570	2.860	0.916	30.33	25.91	2823	1947	0.594	1.337	-1.049	0.663	2.563	0.833	33.0
600S162-68	0.0713	33	0.693	2.36	3.526	1.175	2.256	0.218	0.561	3.525	1.175	26.79	26.79	4347	2339	1.174	1.626	-1.032	0.655	2.543	0.835	40.6
600S162-68	0.0713	50	0.693	2.36	3.526	1.175	2.256	0.218	0.561	3.525	1.164	39.47	35.71	5350	2879	1.174	1.626	-1.032	0.655	2.543	0.835	32.8
600S162-97	0.1017	33	0.966	3.28	4.799	1.600	2.229	0.283	0.542	4.798	1.599	38.38	38.39	6911	2512	3.329	2.153	-0.997	0.636	2.501	0.841	40.3
600S162-97	0.1017	50	0.966	3.28	4.799	1.600	2.229	0.283	0.542	4.798	1.599	56.73	56.75	10472	3806	3.329	2.153	-0.997	0.636	2.501	0.841	32.5
600S162-118	0.1242	33	1.158	3.94	5.655	1.885	2.209	0.322	0.527	5.654	1.885	46.83	46.84	8267	2391	5.956	2.487	-0.971	0.623	2.470	0.846	40.2
600S162-118	0.1242	50	1.158	3.94	5.655	1.885	2.209	0.322	0.527	5.654	1.885	68.95	68.97	12526	3622	5.956	2.487	-0.971	0.623	2.470	0.846	32.3
600S200-33	0.0346	33	0.379	1.29	2.076	0.692	2.340	0.209	0.743	2.058	0.621	12.28	10.77	638	638	0.151	1.593	-1.457	0.901	2.855	0.740	51.6
600S200-43	0.0451	33	0.492	1.67	2.683	0.894	2.335	0.268	0.739	2.683	0.873	17.24	15.39	1416	1240	0.334	2.033	-1.446	0.894	2.844	0.742	51.4
600S200-54	0.0566	33	0.613	2.09	3.320	1.107	2.327	0.329	0.732	3.319	1.106	24.07	22.08	2739	1890	0.655	2.493	-1.432	0.887	2.829	0.744	51.3
600S200-54	0.0566	50	0.613	2.09	3.320	1.107	2.327	0.329	0.732	3.319	1.015	30.40	27.39	2823	1947	0.655	2.493	-1.432	0.887	2.829	0.744	41.6
600S200-68	0.0713	33	0.764	2.60	4.102	1.367	2.316	0.400	0.723	4.101	1.367	30.42	29.98	4347	2339	1.295	3.047	-1.415	0.878	2.809	0.746	51.2
600S200-68	0.0713	50	0.764	2.60	4.102	1.367	2.316	0.400	0.723	4.101	1.317	43.71	39.71	5350	2879	1.295	3.047	-1.415	0.878	2.809	0.746	41.4
600S200-97	0.1017	33	1.067	3.63	5.614	1.871	2.293	0.530	0.705	5.613	1.871	43.50	43.51	6911	2512	3.679	4.080	-1.378	0.859	2.767	0.752	51.1
600S200-97	0.1017	50	1.067	3.63	5.614	1.871	2.293	0.530	0.705	5.613	1.871	64.54	63.70	10472	3806	3.679	4.080	-1.378	0.859	2.767	0.752	41.2
600S200-118	0.1242	33	1.283	4.36	6.643	2.214	2.276	0.612	0.691	6.643	2.214	53.07	53.07	8267	2391	6.595	4.753	-1.351	0.845	2.736	0.756	51.1
600S200-118	0.1242	50	1.283	4.36	6.643	2.214	2.276	0.612	0.691	6.643	2.214	78.46	78.47	12526	3622	6.595	4.753	-1.351	0.845	2.736	0.756	41.1
600S250-43	0.0451	33	0.537	1.83	3.083	1.028	2.396	0.458	0.923	3.083	0.918	18.14	16.21	1416	1240	0.364	3.411	-1.874	1.136	3.179	0.652	62.4
600S250-54	0.0566	33	0.670	2.28	3.820	1.273	2.389	0.562	0.917	3.819	1.159	22.90	21.90	2739	1890	0.715	4.194	-1.860	1.129	3.163	0.654	62.3
600S250-54	0.0566	50	0.670	2.28	3.820	1.273	2.389	0.562	0.917	3.766	1.069	32.00	28.72	2823	1947	0.715	4.194	-1.860	1.129	3.163	0.654	50.5
600S250-68	0.0713	33	0.836	2.84	4.728	1.576	2.379	0.688	0.908	4.727	1.508	32.83	31.52	4347	2339	1.416	5.145	-1.842	1.119	3.142	0.657	62.2
600S250-68	0.0713	50	0.836	2.84	4.728	1.576	2.379	0.688	0.908	4.724	1.386	41.50	39.08	5350	2879	1.416	5.145	-1.842	1.119	3.142	0.657	50.4
600S250-97	0.1017	33	1.169	3.98	6.498	2.166	2.358	0.923	0.889	6.497	2.161	48.81	48.93	6911	2512	4.030	6.947	-1.803	1.100	3.099	0.661	62.2
600S250-97	0.1017	50	1.169	3.98	6.498	2.166	2.358	0.923	0.889	6.497	2.063	69.39	66.84	10472	3806	4.030	6.947	-1.803	1.100	3.099	0.661	50.2
600S250-118	0.1242	33	1.407	4.79	7.715	2.572	2.342	1.076	0.875	7.715	2.572	59.60	59.60	8267	2391	7.234	8.142	-1.775	1.085	3.066	0.665	57.3
600S250-118	0.1242	50	1.407	4.79	7.715	2.572	2.342	1.076	0.875	7.715	2.498	85.94	86.87	12526	3622	7.234	8.142	-1.775	1.085	3.066	0.665	46.7
600S300-54	0.0566	33	0.726	2.47	4.320	1.440	2.439	0.875	1.098	4.269	1.211	23.93	22.81	2739	1890	0.775	6.452	-2.299	1.372	3.527	0.575	72.8
600S300-54	0.0566	50	0.726	2.47	4.320	1.440	2.439	0.875	1.098	4.015	1.106	33.13	29.63	2823	1947	0.775	6.452	-2.299	1.372	3.527	0.575	59.1
600S300-68	0.0713	33	0.907	3.09	5.355	1.785	2.430	1.075	1.089	5.344	1.581	31.24	30.89	4347	2339	1.537	7.937	-2.280	1.363	3.506	0.577	72.8
600S300-68	0.0713	50	0.907	3.09	5.355	1.785	2.430	1.075	1.089	5.222	1.446	43.30	40.54	5350	2879	1.537	7.937	-2.280	1.363	3.506	0.577	58.9
600S300-97	0.1017	33	1.271	4.32	7.383	2.461	2.410	1.454	1.070	7.382	2.353	52.08	52.42	6911	2512	4.381	10.776	-2.241	1.343	3.461	0.581	68.8
600S300-97	0.1017	50	1.271	4.32	7.383	2.461	2.410	1.454	1.070	7.281	2.248	67.29	64.70	10472	3806	4.381	10.776	-2.241	1.343	3.461	0.581	58.8
600S300-118	0.1242	33	1.531	5.21	8.787	2.929	2.396	1.705	1.055	8.787	2.841	64.31	66.30	8267	2391	7.872	12.683	-2.212	1.328	3.427	0.583	68.1
600S300-118	0.1242	50	1.531	5.21	8.787	2.929	2.396	1.705	1.055	8.713	2.797	94.26	90.41	12526	3622	7.872	12.683	-2.212	1.328	3.427	0.583	55.4
600S350-54	0.0566	33	0.825	2.81	5.023	1.674	2.467	1.491	1.344	4.912	1.453	28.70	27.98	2739	1890	0.881	12.942	-3.037	1.787	4.137	0.461	91.8
600S350-54	0.0566	50	0.825	2.81	5.023	1.674	2.467	1.491	1.344	4.722	1.335	39.98	36.57	2823	1947	0.881	12.942	-3.037	1.787	4.137	0.461	74.4
600S350-68	0.0713	33	1.032	3.51	6.238	2.079	2.459	1.841	1.336	6.237	1.949	38.51	37.64	4347	2339	1.748	15.968	-3.018	1.777	4.116	0.462	91.8
600S350-68	0.0713	50	1.032	3.51	6.238	2.079	2.459	1.841	1.336	6.167	1.771	53.02	49.71	5350	2879	1.748	15.968	-3.018	1.777	4.116	0.462	74.4
600S350-97	0.1017	33	1.449	4.93	8.633	2.878	2.441	2.518	1.318	8.632	2.823	61.56	62.50	6911	2512	4.994	21.811	-2.979	1.757	4.071	0.464	87.5
600S350-97	0.1017	50	1.449	4.93	8.633	2.878	2.441	2.518	1.318	8.632	2.594	77.65	78.38	10472	3806	4.994	21.811	-2.979	1.757	4.071	0.464	74.4
600S350-118	0.1242	33	1.748	5.95	10.306	3.435	2.428	2.979	1.305	10.306	3.435	76.41	76.41	8267	2391	8.990	25.791	-2.951	1.742	4.038	0.466	86.9
600S350-118	0.1242	50	1.748	5.95	10.306	3.435	2.428	2.979	1.305	10.306	3.268	108.45	107.70	12526	3622	8.990	25.791	-2.951	1.742	4.038	0.466	70.6
800S137-33[1]	0.0346	33	0.388	1.32	3.199	0.800	2.873	0.073	0.435	2.998	0.622	12.30	10.72	474	474	0.155	0.957	-0.696	0.460	2.988	0.946	32.5
800S137-43	0.0451	33	0.503	1.71	4.135	1.034	2.866	0.093	0.430	4.001	0.896	17.70	15.78	1051	1051	0.341	1.214	-0.687	0.454	2.979	0.947	32.2
800S137-54	0.0566	33	0.627	2.13	5.111	1.278	2.855	0.112	0.423	5.077	1.179	23.29	21.75	2091	2091	0.670	1.478	-0.676	0.448	2.964	0.948	32.0
800S137-54	0.0566	50	0.627	2.13	5.111	1.278	2.855	0.112	0.423	4.974	1.083	32.43	28.49	2091	2091	0.670	1.478	-0.676	0.448	2.964	0.948	25.9
800S137-68	0.0713	33	0.782	2.66	6.305	1.576	2.839	0.134	0.414	6.303	1.541	30.45	29.77	4221	3367	1.325	1.789	-0.661	0.440	2.944	0.950	31.6
800S137-68	0.0713	50	0.782	2.66	6.305	1.576	2.839	0.134	0.414	6.286	1.468	43.97	39.60	4221	3367	1.325	1.789	-0.661	0.440	2.944	0.950	25.6
800S137-97	0.1017	33	1.093	3.72	8.601	2.150	2.806	0.170	0.394	8.598	2.150	53.09	53.11	8843	4824	3.767	2.349	-0.630	0.423	2.902	0.953	27.6
800S137-97	0.1017	50	1.093	3.72	8.601	2.150	2.806	0.170	0.394	8.598	2.150	64.36	63.95	10885	5938	3.767	2.349	-0.630	0.423	2.902	0.953	25.1
800S162-33[1]	0.0346	33	0.413	1.41	3.583	0.896	2.944	0.125	0.550	3.385	0.710	14.03	12.61	474	474	0.165	1.630	-0.936	0.607	3.138	0.911	40.1
800S162-43	0.0451	33	0.537	1.83	4.635	1.159	2.938	0.160	0.546	4.500	1.019	20.14	18.34	1051	1051	0.364	2.076	-0.926	0.601	3.128	0.912	39.8
800S162-54	0.0566	33	0.670	2.28	5.737	1.434	2.927	0.194	0.539	5.702	1.334	26.36	24.99	2091	2091	0.715	2.539	-0.914	0.594	3.114	0.914	39.6
800S162-54	0.0566	50	0.670	2.28	5.737	1.434	2.927	0.194	0.539	5.600	1.229	36.79	32.83	2091	2091	0.715	2.539	-0.914	0.594	3.114	0.914	32.1
800S162-68	0.0713	33	0.836	2.84	7.092	1.773	2.913	0.235	0.530	7.090	1.737	34.33	33.86	4221	3367	1.416	3.093	-0.899	0.586	3.094	0.916	39.3
800S162-68	0.0713	50	0.836	2.84	7.092	1.773	2.913	0.235	0.530	7.070	1.664	49.81	45.13	4221	3367	1.416	3.093	-0.899	0.586	3.094	0.916	31.9
800S162-97	0.1017	33	1.169	3.98	9.717	2.429	2.883	0.305	0.511	9.714	2.429	58.28	58.29	8843	4824	4.030	4.114	-0.866	0.568	3.053	0.920	35.1
800S162-97	0.1017	50	1.169	3.98	9.717	2.429	2.883	0.305	0.511	9.714	2.429	72.71	71.98	10885	5938	4.030	4.114	-0.866	0.568	3.053	0.920	31.4
800S162-118	0.1242	33	1.407	4.79	11.509	2.877	2.860	0.347	0.496	11.506	2.876	71.48	71.50	11341	4971	7.234	4.766	-0.842	0.556	3.023	0.922	34.2
800S162-118	0.1242	50	1.407	4.79	11.509	2.877	2.860	0.347	0.496	11.506	2.876	105.24	105.27	16235	7115	7.234	4.766	-0.842	0.556	3.023	0.922	28.0

[1] Web-height-to-thickness ratio exceeds 200. Web Stiffeners are required at all support points and concentric loads. Suitability of web holes must be evaluated independently.

[2] When web height-to thickness ratio exceeds 260, or flange width-to-thickness ratio exceeds 60, effective properties are not calculated (limitations in AISI Section B1).

See Section Properties Table Notes on page 5.

SFIA
STEEL FRAMING INDUSTRY ASSOCIATION

Structural (S) Stud Section Properties

	Design				Gross Properties					Effective Properties						Torsional Properties						
Member	Thickness (in)	F_y (ksi)	Area (in^2)	Weight (lb/ft)	I_x (in^4)	S_x (in^3)	R_x (in)	I_y (in^4)	R_y (in)	I_x (in^4)	S_x (in^3)	M_a (in-k)	M_{ad} (in-k)	Va_g (lb)	Va_{net} (lb)	J x 1000 (in^4)	C_w (in^6)	X_o (in)	m (in)	R_o (in)	β	L_u (in)
800S200-33[1]	0.0346	33	0.448	1.52	4.097	1.024	3.024	0.227	0.712	4.096	0.816	16.12	14.53	474	474	0.179	2.971	-1.288	0.817	3.363	0.853	50.6
800S200-43	0.0451	33	0.582	1.98	5.303	1.326	3.018	0.292	0.708	5.302	1.293	25.54	20.99	1051	1051	0.395	3.797	-1.277	0.811	3.353	0.855	50.3
800S200-54	0.0566	33	0.726	2.47	6.574	1.644	3.009	0.357	0.701	6.573	1.643	35.75	30.39	2091	2091	0.775	4.663	-1.265	0.804	3.338	0.856	47.8
800S200-54	0.0566	50	0.726	2.47	6.574	1.644	3.009	0.357	0.701	6.573	1.499	44.87	37.39	2091	2091	0.775	4.663	-1.265	0.804	3.338	0.856	40.7
800S200-68	0.0713	33	0.907	3.09	8.143	2.036	2.996	0.435	0.692	8.141	2.035	45.29	41.81	4221	3367	1.537	5.712	-1.248	0.796	3.319	0.859	47.0
800S200-68	0.0713	50	0.907	3.09	8.143	2.036	2.996	0.435	0.692	8.141	1.964	65.21	54.73	4221	3367	1.537	5.712	-1.248	0.796	3.319	0.859	38.4
800S200-97	0.1017	33	1.271	4.32	11.207	2.802	2.970	0.577	0.674	11.204	2.801	65.13	65.14	8843	4824	4.381	7.684	-1.214	0.777	3.278	0.863	45.5
800S200-97	0.1017	50	1.271	4.32	11.207	2.802	2.970	0.577	0.674	11.204	2.801	96.63	89.80	10885	5938	4.381	7.684	-1.214	0.777	3.278	0.863	37.2
800S200-118	0.1242	33	1.531	5.21	13.320	3.330	2.950	0.666	0.659	13.317	3.329	79.79	79.81	11341	4971	7.872	8.981	-1.188	0.764	3.248	0.866	44.6
800S200-118	0.1242	50	1.531	5.21	13.320	3.330	2.950	0.666	0.659	13.317	3.329	117.97	117.61	16235	7115	7.872	8.981	-1.188	0.764	3.248	0.866	36.5
800S250-43	0.0451	33	0.627	2.13	6.017	1.504	3.097	0.500	0.893	6.015	1.314	25.96	22.07	1051	1051	0.425	6.374	-1.675	1.043	3.632	0.787	61.5
800S250-54	0.0566	33	0.783	2.66	7.467	1.867	3.089	0.614	0.886	7.466	1.712	33.82	30.08	2091	2091	0.836	7.850	-1.661	1.036	3.617	0.789	61.4
800S250-54	0.0566	50	0.783	2.66	7.467	1.867	3.089	0.614	0.886	7.378	1.525	45.66	39.14	2091	2091	0.836	7.850	-1.661	1.036	3.617	0.789	49.8
800S250-68	0.0713	33	0.978	3.33	9.263	2.316	3.077	0.752	0.877	9.261	2.220	48.33	43.65	4221	3367	1.658	9.652	-1.644	1.027	3.597	0.791	58.2
800S250-68	0.0713	50	0.978	3.33	9.263	2.316	3.077	0.752	0.877	9.241	2.059	61.65	53.78	4221	3367	1.658	9.652	-1.644	1.027	3.597	0.791	49.6
800S250-97	0.1017	33	1.372	4.67	12.793	3.198	3.053	1.009	0.858	12.790	3.191	72.07	70.75	8843	4824	4.731	13.091	-1.607	1.008	3.555	0.796	56.8
800S250-97	0.1017	50	1.372	4.67	12.793	3.198	3.053	1.009	0.858	12.790	3.054	102.70	93.46	10885	5938	4.731	13.091	-1.607	1.008	3.555	0.796	46.4
800S250-118	0.1242	33	1.655	5.63	15.246	3.811	3.035	1.176	0.843	15.243	3.811	88.32	88.33	11341	4971	8.511	15.395	-1.580	0.994	3.524	0.799	55.9
800S250-118	0.1242	50	1.655	5.63	15.246	3.811	3.035	1.176	0.843	15.243	3.707	127.52	122.98	16235	7115	8.511	15.395	-1.580	0.994	3.524	0.799	45.6
800S300-54	0.0566	33	0.839	2.86	8.360	2.090	3.156	0.959	1.069	8.249	1.785	35.28	31.14	2091	2091	0.896	12.076	-2.073	1.271	3.924	0.721	72.2
800S300-54	0.0566	50	0.839	2.86	8.360	2.090	3.156	0.959	1.069	7.863	1.535	45.97	40.24	2091	2091	0.896	12.076	-2.073	1.271	3.924	0.721	58.6
800S300-68	0.0713	33	1.050	3.57	10.384	2.596	3.145	1.179	1.060	10.351	2.321	45.86	42.56	4221	3367	1.779	14.888	-2.055	1.262	3.904	0.723	72.0
800S300-68	0.0713	50	1.050	3.57	10.384	2.596	3.145	1.179	1.060	10.084	2.145	64.22	55.49	4221	3367	1.779	14.888	-2.055	1.262	3.904	0.723	58.4
800S300-97	0.1017	33	1.474	5.01	14.379	3.595	3.123	1.595	1.040	14.377	3.443	76.22	73.28	8843	4824	5.082	20.304	-2.017	1.243	3.861	0.727	67.7
800S300-97	0.1017	50	1.474	5.01	14.379	3.595	3.123	1.595	1.040	14.172	3.304	98.93	89.93	10885	5938	5.082	20.304	-2.017	1.243	3.861	0.727	58.1
800S300-118	0.1242	33	1.779	6.05	17.172	4.293	3.107	1.872	1.026	17.169	4.168	94.35	95.82	11341	4971	9.149	23.979	-1.989	1.229	3.829	0.730	66.8
800S300-118	0.1242	50	1.779	6.05	17.172	4.293	3.107	1.872	1.026	17.021	4.108	138.43	126.75	16235	7115	9.149	23.979	-1.989	1.229	3.829	0.730	54.5
800S350-54	0.0566	33	0.938	3.19	9.685	2.421	3.213	1.646	1.324	9.478	2.125	41.98	38.30	2091	2091	1.002	22.897	-2.766	1.668	4.442	0.612	90.0
800S350-54	0.0566	50	0.938	3.19	9.685	2.421	3.213	1.646	1.324	9.191	1.869	55.97	49.75	2091	2091	1.002	22.897	-2.766	1.668	4.442	0.612	73.1
800S350-68	0.0713	33	1.174	4.00	12.048	3.012	3.203	2.034	1.316	12.046	2.838	56.07	51.90	4221	3367	1.990	28.308	-2.748	1.658	4.421	0.614	89.9
800S350-68	0.0713	50	1.174	4.00	12.048	3.012	3.203	2.034	1.316	11.910	2.596	77.74	68.07	4221	3367	1.990	28.308	-2.748	1.658	4.421	0.614	72.9
800S350-97	0.1017	33	1.652	5.62	16.741	4.185	3.183	2.784	1.298	16.739	4.101	89.44	87.27	8843	4824	5.696	38.834	-2.710	1.639	4.378	0.617	85.4
800S350-97	0.1017	50	1.652	5.62	16.741	4.185	3.183	2.784	1.298	16.739	3.786	113.35	108.71	10885	5938	5.696	38.834	-2.710	1.639	4.378	0.617	72.7
800S350-118	0.1242	33	1.997	6.79	20.045	5.011	3.168	3.296	1.285	20.043	5.011	111.45	111.46	11341	4971	10.267	46.068	-2.682	1.624	4.346	0.619	84.6
800S350-118	0.1242	50	1.997	6.79	20.045	5.011	3.168	3.296	1.285	20.043	4.763	158.04	150.43	16235	7115	10.267	46.068	-2.682	1.624	4.346	0.619	68.9
1000S162-43[1]	0.0451	33	0.627	2.13	8.028	1.606	3.577	0.168	0.518	7.523	1.302	25.74	22.50	836	836	0.425	3.430	-0.823	0.545	3.707	0.951	38.8
1000S162-54	0.0566	33	0.783	2.66	9.954	1.991	3.566	0.204	0.511	9.628	1.722	34.02	31.13	1661	1661	0.836	4.198	-0.812	0.538	3.693	0.952	38.5
1000S162-54	0.0566	50	0.783	2.66	9.954	1.991	3.566	0.204	0.511	9.391	1.572	47.07	40.39	1661	1661	0.836	4.198	-0.812	0.538	3.693	0.952	31.3
1000S162-68	0.0713	33	0.978	3.33	12.330	2.466	3.550	0.247	0.502	12.257	2.276	44.98	42.94	3345	3345	1.658	5.121	-0.798	0.531	3.673	0.953	38.2
1000S162-68	0.0713	50	0.978	3.33	12.330	2.466	3.550	0.247	0.502	11.979	2.155	64.51	56.39	3345	3345	1.658	5.121	-0.798	0.531	3.673	0.953	31.0
1000S162-97	0.1017	33	1.372	4.67	16.974	3.395	3.517	0.320	0.483	16.968	3.394	67.06	67.08	8843	6434	4.731	6.827	-0.768	0.514	3.632	0.955	37.5
1000S162-97	0.1017	50	1.372	4.67	16.974	3.395	3.517	0.320	0.483	16.968	3.270	97.90	92.61	9864	7177	4.731	6.827	-0.768	0.514	3.632	0.955	30.4
1000S162-118	0.1242	33	1.655	5.63	20.177	4.035	3.491	0.364	0.469	20.171	4.034	100.25	100.28	13189	7747	8.511	7.924	-0.746	0.502	3.601	0.957	33.0
1000S162-118	0.1242	50	1.655	5.63	20.177	4.035	3.491	0.364	0.469	20.171	4.034	120.78	120.41	16235	9536	8.511	7.924	-0.746	0.502	3.601	0.957	30.0
1000S200-43[1]	0.0451	33	0.672	2.29	9.088	1.818	3.676	0.309	0.677	8.603	1.470	29.05	26.16	836	836	0.456	6.236	-1.147	0.743	3.910	0.914	49.3
1000S200-54	0.0566	33	0.839	2.86	11.282	2.256	3.666	0.378	0.671	10.954	1.984	39.20	35.88	1661	1661	0.896	7.665	-1.135	0.737	3.896	0.915	49.1
1000S200-54	0.0566	50	0.839	2.86	11.282	2.256	3.666	0.378	0.671	10.770	1.705	51.05	46.64	1661	1661	0.896	7.665	-1.135	0.737	3.896	0.915	39.8
1000S200-68	0.0713	33	1.050	3.57	13.999	2.800	3.652	0.460	0.662	13.921	2.607	51.52	49.09	3345	3345	1.779	9.401	-1.120	0.729	3.877	0.917	48.8
1000S200-68	0.0713	50	1.050	3.57	13.999	2.800	3.652	0.460	0.662	13.666	2.420	72.47	64.53	3345	3345	1.779	9.401	-1.120	0.729	3.877	0.917	39.6
1000S200-97	0.1017	33	1.474	5.01	19.343	3.869	3.622	0.610	0.643	19.337	3.867	76.42	76.44	8843	6434	5.082	12.679	-1.088	0.711	3.836	0.920	48.2
1000S200-97	0.1017	50	1.474	5.01	19.343	3.869	3.622	0.610	0.643	19.337	3.741	112.01	104.79	9864	7177	5.082	12.679	-1.088	0.711	3.836	0.920	39.0
1000S200-118	0.1242	33	1.779	6.05	23.060	4.612	3.600	0.704	0.629	23.054	4.611	110.50	110.53	13189	7747	9.149	14.848	-1.064	0.699	3.806	0.922	43.3
1000S200-118	0.1242	50	1.779	6.05	23.060	4.612	3.600	0.704	0.629	23.054	4.611	138.05	135.82	16235	9536	9.149	14.848	-1.064	0.699	3.806	0.922	38.7
1000S250-43[1]	0.0451	33	0.717	2.44	10.205	2.041	3.771	0.531	0.860	10.203	1.617	31.95	27.68	836	836	0.486	10.481	-1.518	0.965	4.155	0.867	60.7
1000S250-54	0.0566	33	0.896	3.05	12.681	2.536	3.762	0.653	0.854	12.677	2.277	44.99	38.04	1661	1661	0.957	12.922	-1.505	0.958	4.141	0.868	60.5
1000S250-54	0.0566	50	0.896	3.05	12.681	2.536	3.762	0.653	0.854	12.661	1.879	56.27	49.19	1661	1661	0.957	12.922	-1.505	0.958	4.141	0.868	49.1
1000S250-68	0.0713	33	1.121	3.81	15.756	3.151	3.749	0.799	0.844	15.752	3.028	65.93	55.64	3345	3345	1.899	15.909	-1.488	0.950	4.121	0.870	57.3
1000S250-68	0.0713	50	1.121	3.81	15.756	3.151	3.749	0.799	0.844	15.742	2.769	82.90	68.16	3345	3345	1.899	15.909	-1.488	0.950	4.121	0.870	48.8
1000S250-97	0.1017	33	1.576	5.36	21.834	4.367	3.722	1.073	0.825	21.828	4.357	98.41	91.82	8843	6434	5.433	21.632	-1.454	0.932	4.080	0.873	55.8
1000S250-97	0.1017	50	1.576	5.36	21.834	4.367	3.722	1.073	0.825	21.828	4.181	140.63	120.20	9864	7177	5.433	21.632	-1.454	0.932	4.080	0.873	45.6
1000S250-118	0.1242	33	1.904	6.48	26.088	5.218	3.702	1.251	0.811	26.082	5.216	120.89	120.77	13189	7747	9.788	25.490	-1.428	0.918	4.050	0.876	54.7
1000S250-118	0.1242	50	1.904	6.48	26.088	5.218	3.702	1.251	0.811	26.082	5.083	174.85	159.88	16235	9536	9.788	25.490	-1.428	0.918	4.050	0.876	44.8

[1] Web-height-to-thickness ratio exceeds 200. Web Stiffeners are required at all support points and concentric loads. Suitability of web holes must be evaluated independently.

[2] When web height-to thickness ratio exceeds 260, or flange width-to-thickness ratio exceeds 60, effective properties are not calculated (limitations in AISI Section B1).

See Section Properties Table Notes on page 5.

SFIA
STEEL FRAMING INDUSTRY ASSOCIATION

Structural (S) Stud Section Properties

					Gross Properties					Effective Properties						Torsional Properties						
Member	Design Thickness (in)	F_y (ksi)	Area (in^2)	Weight (lb/ft)	I_x (in^4)	S_x (in^3)	R_x (in)	I_y (in^4)	R_y (in)	I_x (in^4)	S_x (in^3)	M_a (in-k)	M_{ad} (in-k)	Va_g (lb)	Va_{net} (lb)	J x 1000 (in^4)	C_w (in^6)	X_o (in)	m (in)	R_o (in)	β	L_u (in)
1000S300-54	0.0566	33	0.953	3.24	14.080	2.816	3.845	1.024	1.037	13.938	2.312	45.70	39.43	1661	1661	1.017	19.888	-1.892	1.185	4.409	0.816	71.5
1000S300-54	0.0566	50	0.953	3.24	14.080	2.816	3.845	1.024	1.037	13.441	1.903	56.97	50.71	1661	1661	1.017	19.888	-1.892	1.185	4.409	0.816	58.0
1000S300-68	0.0713	33	1.192	4.06	17.513	3.503	3.833	1.258	1.027	17.442	3.158	62.41	54.31	3345	3345	2.020	24.551	-1.874	1.176	4.389	0.818	71.3
1000S300-68	0.0713	50	1.192	4.06	17.513	3.503	3.833	1.258	1.027	17.099	2.802	83.90	70.43	3345	3345	2.020	24.551	-1.874	1.176	4.389	0.818	57.8
1000S300-97	0.1017	33	1.677	5.71	24.325	4.865	3.808	1.703	1.007	24.319	4.671	103.39	94.75	8843	6434	5.783	33.570	-1.838	1.158	4.347	0.821	66.9
1000S300-97	0.1017	50	1.677	5.71	24.325	4.865	3.808	1.703	1.007	23.972	4.499	134.70	115.68	9864	7177	5.783	33.570	-1.838	1.158	4.347	0.821	57.4
1000S300-118	0.1242	33	2.028	6.90	29.117	5.823	3.789	1.998	0.993	29.111	5.662	128.17	125.10	13189	7747	10.427	39.725	-1.811	1.144	4.316	0.824	65.8
1000S300-118	0.1242	50	2.028	6.90	29.117	5.823	3.789	1.998	0.993	28.858	5.587	188.24	164.27	16235	9536	10.427	39.725	-1.811	1.144	4.316	0.824	53.8
1000S350-54	0.0566	33	1.052	3.58	16.223	3.245	3.928	1.768	1.297	15.943	2.772	54.77	48.71	1661	1661	1.123	36.575	-2.546	1.566	4.857	0.725	88.9
1000S350-54	0.0566	50	1.052	3.58	16.223	3.245	3.928	1.768	1.297	15.578	2.328	69.70	62.99	1661	1661	1.123	36.575	-2.546	1.566	4.857	0.725	72.2
1000S350-68	0.0713	33	1.317	4.48	20.209	4.042	3.917	2.185	1.288	20.205	3.824	75.57	66.42	3345	3345	2.232	45.277	-2.529	1.557	4.837	0.727	88.7
1000S350-68	0.0713	50	1.317	4.48	20.209	4.042	3.917	2.185	1.288	20.027	3.418	102.33	86.63	3345	3345	2.232	45.277	-2.529	1.557	4.837	0.727	72.0
1000S350-97	0.1017	33	1.855	6.31	28.154	5.631	3.895	2.992	1.270	28.149	5.518	120.33	112.84	8843	6434	6.397	62.280	-2.492	1.538	4.795	0.730	84.1
1000S350-97	0.1017	50	1.855	6.31	28.154	5.631	3.895	2.992	1.270	28.149	5.119	153.26	139.79	9864	7177	6.397	62.280	-2.492	1.538	4.795	0.730	71.6
1000S350-118	0.1242	33	2.245	7.64	33.780	6.756	3.879	3.544	1.256	33.774	6.755	150.24	147.08	13189	7747	11.544	74.030	-2.465	1.524	4.764	0.732	83.1
1000S350-118	0.1242	50	2.245	7.64	33.780	6.756	3.879	3.544	1.256	33.774	6.427	213.26	194.54	16235	9536	11.544	74.030	-2.465	1.524	4.764	0.732	67.8
1200S162-54[1]	0.0566	33	0.896	3.05	15.736	2.623	4.191	0.212	0.486	14.744	2.109	41.68	36.40	1377	1377	0.957	6.340	-0.732	0.493	4.282	0.971	37.5
1200S162-54[1]	0.0566	50	0.896	3.05	15.736	2.623	4.191	0.212	0.486	14.299	1.914	57.32	46.79	1377	1377	0.957	6.340	-0.732	0.493	4.282	0.971	30.5
1200S162-68	0.0713	33	1.121	3.81	19.526	3.254	4.174	0.255	0.477	18.956	2.817	55.66	50.99	2771	2771	1.899	7.739	-0.719	0.485	4.262	0.972	37.2
1200S162-68	0.0713	50	1.121	3.81	19.526	3.254	4.174	0.255	0.477	18.391	2.645	79.20	66.18	2771	2771	1.899	7.739	-0.719	0.485	4.262	0.972	30.2
1200S162-97	0.1017	33	1.576	5.36	26.977	4.496	4.138	0.332	0.459	26.967	4.327	85.51	83.91	8147	7411	5.433	10.331	-0.691	0.470	4.220	0.973	36.4
1200S162-97	0.1017	50	1.576	5.36	26.977	4.496	4.138	0.332	0.459	26.738	4.091	122.50	111.38	8147	7411	5.433	10.331	-0.691	0.470	4.220	0.973	29.5
1200S162-118	0.1242	33	1.904	6.48	32.158	5.360	4.110	0.377	0.445	32.146	5.358	105.87	105.91	13189	9714	9.788	12.002	-0.670	0.459	4.188	0.974	35.9
1200S162-118	0.1242	50	1.904	6.48	32.158	5.360	4.110	0.377	0.445	32.146	5.169	154.75	147.33	14986	11037	9.788	12.002	-0.670	0.459	4.188	0.974	29.0
1200S200-54[1]	0.0566	33	0.953	3.24	17.668	2.945	4.307	0.394	0.643	16.679	2.425	47.93	42.49	1377	1377	1.017	11.550	-1.032	0.681	4.475	0.947	48.0
1200S200-54[1]	0.0566	50	0.953	3.24	17.668	2.945	4.307	0.394	0.643	16.335	2.073	62.07	54.77	1377	1377	1.017	11.550	-1.032	0.681	4.475	0.947	39.0
1200S200-68	0.0713	33	1.192	4.06	21.955	3.659	4.291	0.479	0.634	21.378	3.216	63.54	58.86	2771	2771	2.020	14.176	-1.017	0.673	4.456	0.948	47.7
1200S200-68	0.0713	50	1.192	4.06	21.955	3.659	4.291	0.479	0.634	20.865	2.963	88.72	76.60	2771	2771	2.020	14.176	-1.017	0.673	4.456	0.948	38.7
1200S200-97	0.1017	33	1.677	5.71	30.428	5.071	4.259	0.635	0.615	30.418	4.899	96.81	95.49	8147	7411	5.783	19.150	-0.987	0.656	4.415	0.950	47.0
1200S200-97	0.1017	50	1.677	5.71	30.428	5.071	4.259	0.635	0.615	30.177	4.660	139.52	126.94	8147	7411	5.783	19.150	-0.987	0.656	4.415	0.950	38.1
1200S200-118	0.1242	33	2.028	6.90	36.361	6.060	4.235	0.733	0.601	36.349	6.058	119.71	119.75	13189	9714	10.427	22.451	-0.964	0.644	4.384	0.952	46.6
1200S200-118	0.1242	50	2.028	6.90	36.361	6.060	4.235	0.733	0.601	36.349	5.865	175.61	166.90	14986	11037	10.427	22.451	-0.964	0.644	4.384	0.952	37.7
1200S250-54[1]	0.0566	33	1.009	3.43	19.687	3.281	4.417	0.683	0.823	18.832	2.483	49.06	45.45	1377	1377	1.078	19.505	-1.378	0.892	4.699	0.914	59.5
1200S250-54[1]	0.0566	50	1.009	3.43	19.687	3.281	4.417	0.683	0.823	18.437	2.149	64.34	58.42	1377	1377	1.078	19.505	-1.378	0.892	4.699	0.914	48.3
1200S250-68	0.0713	33	1.263	4.30	24.491	4.082	4.403	0.836	0.813	23.964	3.496	69.08	62.98	2771	2771	2.141	24.034	-1.362	0.884	4.680	0.915	59.2
1200S250-68	0.0713	50	1.263	4.30	24.491	4.082	4.403	0.836	0.813	23.576	3.007	90.04	81.64	2771	2771	2.141	24.034	-1.362	0.884	4.680	0.915	48.1
1200S250-97	0.1017	33	1.779	6.05	34.027	5.671	4.373	1.122	0.794	34.017	5.496	108.60	102.58	8147	7411	6.134	32.734	-1.329	0.867	4.639	0.918	58.6
1200S250-97	0.1017	50	1.779	6.05	34.027	5.671	4.373	1.122	0.794	33.837	5.038	150.83	135.45	8147	7411	6.134	32.734	-1.329	0.867	4.639	0.918	47.5
1200S250-118	0.1242	33	2.152	7.32	40.740	6.790	4.351	1.308	0.780	40.728	6.788	134.13	133.26	13189	9714	11.065	38.619	-1.305	0.854	4.609	0.920	58.2
1200S250-118	0.1242	50	2.152	7.32	40.740	6.790	4.351	1.308	0.780	40.728	6.542	195.86	178.67	14986	11037	11.065	38.619	-1.305	0.854	4.609	0.920	47.1
1200S300-54[1]	0.0566	33	1.066	3.63	21.705	3.618	4.513	1.074	1.004	21.650	2.736	54.06	47.38	1377	1377	1.138	30.051	-1.743	1.111	4.941	0.876	70.7
1200S300-54[1]	0.0566	50	1.066	3.63	21.705	3.618	4.513	1.074	1.004	21.045	2.273	68.04	60.68	1377	1377	1.138	30.051	-1.743	1.111	4.941	0.876	57.4
1200S300-68	0.0713	33	1.335	4.54	27.028	4.505	4.500	1.320	0.994	26.919	4.064	80.31	65.75	2771	2771	2.262	37.126	-1.726	1.103	4.921	0.877	70.5
1200S300-68	0.0713	50	1.335	4.54	27.028	4.505	4.500	1.320	0.994	26.510	3.317	99.33	84.83	2771	2771	2.262	37.126	-1.726	1.103	4.921	0.877	57.2
1200S300-97	0.1017	33	1.881	6.40	37.627	6.271	4.473	1.787	0.975	37.617	6.035	133.59	116.12	8147	7411	6.484	50.853	-1.691	1.085	4.880	0.880	66.0
1200S300-97	0.1017	50	1.881	6.40	37.627	6.271	4.473	1.787	0.975	37.087	5.831	174.58	141.13	8147	7411	6.484	50.853	-1.691	1.085	4.880	0.880	56.7
1200S300-118	0.1242	33	2.276	7.74	45.119	7.520	4.452	2.096	0.960	45.107	7.323	165.77	154.73	13189	9714	11.704	60.251	-1.666	1.071	4.850	0.882	64.9
1200S300-118	0.1242	50	2.276	7.74	45.119	7.520	4.452	2.096	0.960	44.722	7.232	243.68	201.79	14986	11037	11.704	60.251	-1.666	1.071	4.850	0.882	53.0
1200S350-54[1]	0.0566	33	1.165	3.96	24.866	4.144	4.620	1.866	1.266	24.611	3.296	65.13	58.97	1377	1377	1.244	54.279	-2.363	1.478	5.342	0.804	88.0
1200S350-54[1]	0.0566	50	1.165	3.96	24.866	4.144	4.620	1.866	1.266	24.089	2.788	83.47	75.94	1377	1377	1.244	54.279	-2.363	1.478	5.342	0.804	71.4
1200S350-68	0.0713	33	1.460	4.97	31.004	5.167	4.609	2.306	1.257	30.997	4.908	96.98	80.85	2771	2771	2.473	67.251	-2.346	1.469	5.322	0.806	87.7
1200S350-68	0.0713	50	1.460	4.97	31.004	5.167	4.609	2.306	1.257	30.917	4.062	121.60	104.93	2771	2771	2.473	67.251	-2.346	1.469	5.322	0.806	71.2
1200S350-97	0.1017	33	2.059	7.00	43.280	7.213	4.585	3.159	1.239	43.270	7.071	154.22	138.62	8147	7411	7.098	92.672	-2.310	1.450	5.281	0.809	83.0
1200S350-97	0.1017	50	2.059	7.00	43.280	7.213	4.585	3.159	1.239	43.270	6.590	197.32	170.91	8147	7411	7.098	92.672	-2.310	1.450	5.281	0.809	70.8
1200S350-118	0.1242	33	2.494	8.48	52.006	8.668	4.567	3.742	1.225	51.995	8.666	192.75	181.98	13189	9714	12.821	110.302	-2.284	1.436	5.251	0.811	81.9
1200S350-118	0.1242	50	2.494	8.48	52.006	8.668	4.567	3.742	1.225	51.995	8.260	274.08	239.06	14986	11037	12.821	110.302	-2.284	1.436	5.251	0.811	66.9
1400S200-54[1]	0.0566	33	1.066	3.63	25.961	3.709	4.936	0.406	0.617	23.768	2.866	56.63	48.21	1177	1177	1.138	16.355	-0.946	0.633	5.063	0.965	47.0
1400S200-54[1]	0.0566	50	1.066	3.63	25.961	3.709	4.936	0.406	0.617	23.201	2.440	73.06	61.71	1177	1177	1.138	16.355	-0.946	0.633	5.063	0.965	38.2
1400S200-68	0.0713	33	1.335	4.54	32.297	4.614	4.919	0.494	0.608	30.686	3.824	75.56	67.54	2365	2365	2.262	20.083	-0.932	0.625	5.043	0.966	46.7
1400S200-68	0.0713	50	1.335	4.54	32.297	4.614	4.919	0.494	0.608	29.798	3.505	104.93	87.16	2365	2365	2.262	20.083	-0.932	0.625	5.043	0.966	37.9
1400S200-97	0.1017	33	1.881	6.40	44.870	6.410	4.884	0.655	0.590	44.687	5.918	116.94	111.94	6939	6939	6.484	27.156	-0.904	0.609	5.002	0.967	45.9
1400S200-97	0.1017	50	1.881	6.40	44.870	6.410	4.884	0.655	0.590	43.619	5.580	167.08	147.07	6939	6939	6.484	27.156	-0.904	0.609	5.002	0.967	37.3
1400S200-118	0.1242	33	2.276	7.74	53.719	7.674	4.858	0.756	0.576	53.700	7.481	147.82	146.80	12745	11287	11.704	31.861	-0.883	0.598	4.971	0.968	45.4
1400S200-118	0.1242	50	2.276	7.74	53.719	7.674	4.858	0.756	0.576	53.525	7.097	212.48	195.75	12745	11287	11.704	31.861	-0.883	0.598	4.971	0.968	36.8

[1] Web-height-to-thickness ratio exceeds 200. Web Stiffeners are required at all support points and concentric loads. Suitability of web holes must be evaluated independently.

[2] When web height-to thickness ratio exceeds 260, or flange width-to-thickness ratio exceeds 60, effective properties are not calculated (limitations in AISI Section B1).

See Section Properties Table Notes on page 5.

SFIA
STEEL FRAMING INDUSTRY ASSOCIATION

Structural (S) Stud Section Properties

	Design				Gross Properties					Effective Properties						Torsional Properties						
Member	Thickness (in)	F_y (ksi)	Area (in^2)	Weight (lb/ft)	I_x (in^4)	S_x (in^3)	R_x (in)	I_y (in^4)	R_y (in)	I_x (in^4)	S_x (in^3)	M_a (in-k)	M_{ad} (in-k)	Va_q (lb)	Va_{net} (lb)	J x 1000 (in^4)	C_w (in^6)	X_o (in)	m (in)	R_o (in)	β	L_u (in)
1400S250-54[1]	0.0566	33	1.122	3.82	28.712	4.102	5.058	0.707	0.794	26.759	2.927	57.84	52.11	1177	1177	1.198	27.675	-1.272	0.835	5.275	0.942	58.6
1400S250-54[1]	0.0566	50	1.122	3.82	28.712	4.102	5.058	0.707	0.794	26.148	2.527	75.65	66.62	1177	1177	1.198	27.675	-1.272	0.835	5.275	0.942	47.6
1400S250-68	0.0713	33	1.406	4.78	35.755	5.108	5.043	0.865	0.784	34.241	4.145	81.91	72.86	2365	2365	2.383	34.118	-1.257	0.827	5.256	0.943	58.3
1400S250-68	0.0713	50	1.406	4.78	35.755	5.108	5.043	0.865	0.784	33.568	3.550	106.30	93.84	2365	2365	2.383	34.118	-1.257	0.827	5.256	0.943	47.3
1400S250-97	0.1017	33	1.983	6.74	49.781	7.112	5.011	1.161	0.765	49.583	6.611	130.65	120.72	6939	6939	6.835	46.520	-1.225	0.811	5.215	0.945	57.6
1400S250-97	0.1017	50	1.983	6.74	49.781	7.112	5.011	1.161	0.765	48.652	6.011	179.96	158.04	6939	6939	6.835	46.520	-1.225	0.811	5.215	0.945	46.7
1400S250-118	0.1242	33	2.400	8.17	59.697	8.528	4.987	1.353	0.751	59.678	8.331	164.62	158.71	12745	11287	12.342	54.927	-1.203	0.798	5.185	0.946	57.1
1400S250-118	0.1242	50	2.400	8.17	59.697	8.528	4.987	1.353	0.751	59.508	7.881	235.96	210.55	12745	11287	12.342	54.927	-1.203	0.798	5.185	0.946	46.2
1400S300-54[1]	0.0566	33	1.179	4.01	31.463	4.495	5.166	1.115	0.972	29.584	3.019	59.66	54.77	1177	1177	1.259	42.690	-1.617	1.046	5.500	0.914	69.9
1400S300-54[1]	0.0566	50	1.179	4.01	31.463	4.495	5.166	1.115	0.972	27.235	2.580	77.26	69.85	1177	1177	1.259	42.690	-1.617	1.046	5.500	0.914	56.8
1400S300-68	0.0713	33	1.477	5.03	39.213	5.602	5.152	1.370	0.963	37.904	4.237	83.72	76.55	2365	2365	2.503	52.772	-1.601	1.038	5.480	0.915	69.6
1400S300-68	0.0713	50	1.477	5.03	39.213	5.602	5.152	1.370	0.963	36.295	3.655	109.43	98.30	2365	2365	2.503	52.772	-1.601	1.038	5.480	0.915	56.5
1400S300-97	0.1017	33	2.084	7.09	54.692	7.813	5.123	1.854	0.943	54.577	7.035	139.02	127.07	6939	6939	7.186	72.365	-1.568	1.020	5.440	0.917	68.9
1400S300-97	0.1017	50	2.084	7.09	54.692	7.813	5.123	1.854	0.943	53.232	6.373	190.80	165.54	6939	6939	7.186	72.365	-1.568	1.020	5.440	0.917	55.9
1400S300-118	0.1242	33	2.525	8.59	65.676	9.382	5.100	2.175	0.928	65.657	9.046	178.76	167.63	12745	11287	12.981	85.812	-1.544	1.008	5.409	0.919	68.5
1400S300-118	0.1242	50	2.525	8.59	65.676	9.382	5.100	2.175	0.928	65.574	8.427	252.31	220.94	12745	11287	12.981	85.812	-1.544	1.008	5.409	0.919	55.5
1400S350-54[1]	0.0566	33	1.278	4.35	35.840	5.120	5.296	1.947	1.234	35.661	3.823	75.55	68.82	1177	1177	1.365	76.252	-2.207	1.400	5.868	0.859	87.0
1400S350-54[1]	0.0566	50	1.278	4.35	35.840	5.120	5.296	1.947	1.234	33.317	3.249	97.28	88.28	1177	1177	1.365	76.252	-2.207	1.400	5.868	0.859	70.7
1400S350-68	0.0713	33	1.602	5.45	44.719	6.388	5.283	2.406	1.226	44.708	5.701	112.65	94.85	2365	2365	2.715	94.534	-2.190	1.391	5.849	0.860	86.8
1400S350-68	0.0713	50	1.602	5.45	44.719	6.388	5.283	2.406	1.226	44.708	4.710	141.01	122.54	2365	2365	2.715	94.534	-2.190	1.391	5.849	0.860	70.4
1400S350-97	0.1017	33	2.262	7.70	62.525	8.932	5.257	3.296	1.207	62.509	8.762	191.09	164.02	6939	6939	7.799	130.430	-2.156	1.373	5.809	0.862	82.0
1400S350-97	0.1017	50	2.262	7.70	62.525	8.932	5.257	3.296	1.207	62.509	8.190	245.21	201.34	6939	6939	7.799	130.430	-2.156	1.373	5.809	0.862	69.9
1400S350-118	0.1242	33	2.742	9.33	75.221	10.746	5.238	3.904	1.193	75.202	10.743	238.95	216.76	12745	11287	14.099	155.387	-2.130	1.360	5.779	0.864	80.9
1400S350-118	0.1242	50	2.742	9.33	75.221	10.746	5.238	3.904	1.193	75.202	10.260	340.45	282.98	12745	11287	14.099	155.387	-2.130	1.360	5.779	0.864	66.1
1600S200-68[1]	0.0713	33	1.477	5.03	45.310	5.664	5.538	0.506	0.585	41.918	4.431	87.56	75.16	2062	2062	2.503	27.155	-0.862	0.584	5.635	0.977	45.7
1600S200-68[1]	0.0713	50	1.477	5.03	45.310	5.664	5.538	0.506	0.585	40.526	4.045	121.11	96.33	2062	2062	2.503	27.155	-0.862	0.584	5.635	0.977	37.1
1600S200-97	0.1017	33	2.084	7.09	63.076	7.885	5.501	0.671	0.567	61.760	6.938	137.10	126.87	6043	6043	7.186	36.744	-0.835	0.569	5.593	0.978	44.9
1600S200-97	0.1017	50	2.084	7.09	63.076	7.885	5.501	0.671	0.567	59.936	6.500	194.62	165.10	6043	6043	7.186	36.744	-0.835	0.569	5.593	0.978	36.4
1600S200-118	0.1242	33	2.525	8.59	75.633	9.454	5.473	0.774	0.554	75.603	8.859	175.06	168.50	11088	11088	12.981	43.132	-0.815	0.558	5.561	0.979	44.3
1600S200-118	0.1242	50	2.525	8.59	75.633	9.454	5.473	0.774	0.554	74.087	8.332	249.45	222.01	11088	11088	12.981	43.132	-0.815	0.558	5.561	0.979	35.9
1600S250-68[1]	0.0713	33	1.549	5.27	49.832	6.229	5.673	0.889	0.758	46.610	4.793	94.70	81.74	2062	2062	2.624	46.230	-1.167	0.778	5.841	0.960	57.3
1600S250-68[1]	0.0713	50	1.549	5.27	49.832	6.229	5.673	0.889	0.758	45.551	4.092	122.52	104.69	2062	2062	2.624	46.230	-1.167	0.778	5.841	0.960	46.5
1600S250-97	0.1017	33	2.186	7.44	69.503	8.688	5.639	1.193	0.739	68.162	7.729	152.72	137.55	6043	6043	7.536	63.082	-1.138	0.762	5.800	0.962	56.5
1600S250-97	0.1017	50	2.186	7.44	69.503	8.688	5.639	1.193	0.739	66.581	6.983	209.07	178.72	6043	6043	7.536	63.082	-1.138	0.762	5.800	0.962	45.9
1600S250-118	0.1242	33	2.649	9.01	83.459	10.432	5.613	1.390	0.724	83.429	9.828	194.20	182.77	11088	11088	13.620	74.524	-1.116	0.750	5.769	0.963	56.0
1600S250-118	0.1242	50	2.649	9.01	83.459	10.432	5.613	1.390	0.724	81.927	9.223	276.13	240.23	11088	11088	13.620	74.524	-1.116	0.750	5.769	0.963	45.4
1600S300-68[1]	0.0713	33	1.620	5.51	54.355	6.794	5.793	1.411	0.933	51.472	4.893	96.68	86.51	2062	2062	2.745	71.608	-1.494	0.981	6.055	0.939	68.7
1600S300-68[1]	0.0713	50	1.620	5.51	54.355	6.794	5.793	1.411	0.933	49.116	4.210	126.05	110.60	2062	2062	2.745	71.608	-1.494	0.981	6.055	0.939	55.8
1600S300-97	0.1017	33	2.288	7.78	75.929	9.491	5.761	1.910	0.914	74.744	8.203	162.10	145.47	6043	6043	7.887	98.275	-1.463	0.964	6.014	0.941	67.9
1600S300-97	0.1017	50	2.288	7.78	75.929	9.491	5.761	1.910	0.914	72.678	7.391	221.30	188.44	6043	6043	7.887	98.275	-1.463	0.964	6.014	0.941	55.1
1600S300-118	0.1242	33	2.773	9.43	91.284	11.411	5.738	2.240	0.899	91.255	10.638	210.21	193.58	11088	11088	14.258	116.606	-1.439	0.951	5.983	0.942	67.4
1600S300-118	0.1242	50	2.773	9.43	91.284	11.411	5.738	2.240	0.899	89.916	9.836	294.49	253.40	11088	11088	14.258	116.606	-1.439	0.951	5.983	0.942	54.7
1600S350-68[1]	0.0713	33	1.745	5.94	61.641	7.705	5.944	2.490	1.195	58.539	6.042	119.39	108.09	2062	2062	2.957	127.370	-2.055	1.322	6.402	0.897	85.8
1600S350-68[1]	0.0713	50	1.745	5.94	61.641	7.705	5.944	2.490	1.195	57.446	5.180	155.10	139.05	2062	2062	2.957	127.370	-2.055	1.322	6.402	0.897	69.7
1600S350-97	0.1017	33	2.466	8.39	86.296	10.787	5.916	3.410	1.176	84.932	9.772	193.10	176.74	6043	6043	8.501	175.895	-2.022	1.304	6.362	0.899	85.2
1600S350-97	0.1017	50	2.466	8.39	86.296	10.787	5.916	3.410	1.176	83.695	8.383	250.97	230.44	6043	6043	8.501	175.895	-2.022	1.304	6.362	0.899	69.1
1600S350-118	0.1242	33	2.990	10.17	103.924	12.990	5.895	4.039	1.162	103.894	12.368	244.39	231.31	11088	11088	15.376	209.692	-1.998	1.291	6.332	0.900	84.8
1600S350-118	0.1242	50	2.990	10.17	103.924	12.990	5.895	4.039	1.162	102.539	11.306	338.49	304.73	11088	11088	15.376	209.692	-1.998	1.291	6.332	0.900	68.8

[1] Web-height-to-thickness ratio exceeds 200. Web Stiffeners are required at all support points and concentric loads. Suitability of web holes must be evaluated independently.

[2] When web height-to thickness ratio exceeds 260, or flange width-to-thickness ratio exceeds 60, effective properties are not calculated (limitations in AISI Section B1).

See Section Properties Table Notes on page 5.

SFIA
STEEL FRAMING INDUSTRY ASSOCIATION

(T) Track Section Properties

			Gross Properties							Effective Properties				Torsional Properties					
Member	Design Thickness (in)	Fy (ksi)	Area (in^2)	Weight (lb/ft)	I_x (in^4)	S_x (in^3)	R_x (in)	I_y (in^4)	R_y (in)	I_x (in^4)	S_x (in^3)	M_a (in-k)	Va_g (lb)	J x 1000 (in^4)	C_w (in^6)	X_o (in)	m (in)	R_o (in)	β
162T125-18	0.0188	33	0.078	0.26	0.042	0.048	0.733	0.013	0.411	0.030	0.025	0.50	302	0.0091	0.007	-0.876	0.503	1.215	0.479
162T125-27	0.0283	33	0.117	0.40	0.063	0.072	0.735	0.020	0.410	0.051	0.044	0.87	541	0.0312	0.010	-0.872	0.501	1.211	0.482
162T125-30	0.0312	33	0.129	0.44	0.070	0.079	0.735	0.022	0.409	0.057	0.050	1.00	597	0.0417	0.012	-0.870	0.500	1.210	0.483
162T125-33	0.0346	33	0.143	0.49	0.077	0.087	0.736	0.024	0.408	0.066	0.058	1.15	663	0.0569	0.013	-0.868	0.499	1.209	0.484
250T125-18	0.0188	33	0.094	0.32	0.104	0.079	1.052	0.015	0.400	0.078	0.044	0.88	245	0.0111	0.018	-0.767	0.460	1.362	0.682
250T125-27	0.0283	33	0.141	0.48	0.157	0.119	1.053	0.022	0.398	0.129	0.079	1.56	685	0.0378	0.027	-0.763	0.457	1.360	0.685
250T125-30	0.0312	33	0.156	0.53	0.173	0.131	1.053	0.025	0.397	0.145	0.090	1.77	832	0.0506	0.030	-0.762	0.456	1.359	0.686
250T125-33	0.0346	33	0.173	0.59	0.192	0.145	1.054	0.027	0.397	0.166	0.103	2.03	1024	0.0690	0.033	-0.760	0.456	1.358	0.687
250T125-43	0.0451	33	0.225	0.77	0.250	0.188	1.055	0.035	0.395	0.231	0.147	2.91	1356	0.1526	0.042	-0.755	0.453	1.356	0.690
250T125-54	0.0566	33	0.282	0.96	0.318	0.236	1.062	0.043	0.392	0.310	0.203	4.01	1692	0.3015	0.054	-0.749	0.449	1.357	0.696
250T125-54	0.0566	50	0.282	0.96	0.318	0.236	1.062	0.043	0.392	0.297	0.188	5.64	2563	0.3015	0.054	-0.749	0.449	1.357	0.696
250T125-68	0.0713	33	0.355	1.21	0.409	0.297	1.072	0.054	0.389	0.409	0.281	5.56	2112	0.6022	0.069	-0.740	0.444	1.360	0.704
250T125-68	0.0713	50	0.355	1.21	0.409	0.297	1.072	0.054	0.389	0.403	0.262	7.85	3199	0.6022	0.069	-0.740	0.444	1.360	0.704
250T150-27	0.0283	33	0.156	0.53	0.181	0.137	1.078	0.037	0.486	0.139	0.082	1.61	685	0.0415	0.044	-0.976	0.575	1.534	0.595
250T150-30	0.0312	33	0.172	0.58	0.200	0.151	1.078	0.040	0.486	0.157	0.093	1.83	832	0.0557	0.049	-0.975	0.574	1.533	0.595
250T150-33	0.0346	33	0.190	0.65	0.221	0.167	1.079	0.045	0.485	0.180	0.107	2.11	1024	0.0759	0.054	-0.973	0.573	1.532	0.596
250T150-43	0.0451	33	0.248	0.84	0.289	0.217	1.080	0.058	0.483	0.252	0.154	3.03	1356	0.1679	0.070	-0.968	0.570	1.529	0.599
250T150-54	0.0566	33	0.311	1.06	0.368	0.273	1.088	0.072	0.481	0.342	0.214	4.22	1692	0.3317	0.089	-0.961	0.566	1.530	0.605
250T150-54	0.0566	50	0.311	1.06	0.368	0.273	1.088	0.072	0.481	0.325	0.197	5.89	2563	0.3317	0.089	-0.961	0.566	1.530	0.605
250T150-68	0.0713	33	0.391	1.33	0.472	0.344	1.099	0.089	0.478	0.465	0.299	5.92	2112	0.6627	0.114	-0.953	0.561	1.531	0.613
250T150-68	0.0713	50	0.391	1.33	0.472	0.344	1.099	0.089	0.478	0.445	0.276	8.27	3199	0.6627	0.114	-0.953	0.561	1.531	0.613
250T200-33	0.0346	33	0.225	0.76	0.280	0.212	1.117	0.097	0.658	0.203	0.112	2.22	1024	0.0897	0.118	-1.418	0.813	1.922	0.455
250T200-43	0.0451	33	0.293	1.00	0.366	0.275	1.119	0.126	0.656	0.288	0.163	3.21	1356	0.1985	0.153	-1.413	0.810	1.918	0.457
250T200-54	0.0566	33	0.367	1.25	0.466	0.346	1.127	0.157	0.654	0.396	0.228	4.51	1692	0.3921	0.195	-1.405	0.806	1.917	0.462
250T200-54	0.0566	50	0.367	1.25	0.466	0.346	1.127	0.157	0.654	0.372	0.209	6.25	2563	0.3921	0.195	-1.405	0.806	1.917	0.462
250T200-68	0.0713	33	0.462	1.57	0.600	0.437	1.139	0.196	0.652	0.548	0.324	6.41	2112	0.7835	0.251	-1.396	0.800	1.916	0.469
250T200-68	0.0713	50	0.462	1.57	0.600	0.437	1.139	0.196	0.652	0.517	0.296	8.87	3199	0.7835	0.251	-1.396	0.800	1.916	0.469
350T125-18	0.0188	33	0.113	0.38	0.220	0.121	1.395	0.017	0.382	0.174	0.062	1.22	173	0.0133	0.038	-0.675	0.418	1.596	0.821
350T125-27	0.0283	33	0.170	0.58	0.331	0.182	1.396	0.025	0.381	0.277	0.128	2.53	590	0.0453	0.057	-0.670	0.416	1.595	0.823
350T125-30	0.0312	33	0.187	0.64	0.365	0.200	1.396	0.027	0.380	0.312	0.145	2.86	790	0.0607	0.063	-0.669	0.415	1.594	0.824
350T125-33	0.0346	33	0.207	0.71	0.405	0.222	1.397	0.030	0.379	0.355	0.165	3.27	1024	0.0828	0.070	-0.668	0.414	1.594	0.824
350T125-43	0.0451	33	0.270	0.92	0.528	0.288	1.398	0.038	0.377	0.490	0.233	4.61	1739	0.1832	0.090	-0.663	0.412	1.592	0.826
350T125-54	0.0566	33	0.339	1.15	0.668	0.361	1.404	0.048	0.375	0.651	0.317	6.26	2392	0.3619	0.114	-0.658	0.408	1.595	0.830
350T125-54	0.0566	50	0.339	1.15	0.668	0.361	1.404	0.048	0.375	0.626	0.297	8.90	3372	0.3619	0.114	-0.658	0.408	1.595	0.830
350T125-68	0.0713	33	0.427	1.45	0.851	0.454	1.412	0.059	0.372	0.851	0.433	8.55	2994	0.7231	0.144	-0.650	0.403	1.599	0.835
350T125-68	0.0713	50	0.427	1.45	0.851	0.454	1.412	0.059	0.372	0.839	0.407	12.19	4536	0.7231	0.144	-0.650	0.403	1.599	0.835
350T125-97	0.1017	33	0.608	2.07	1.243	0.645	1.430	0.081	0.366	1.243	0.645	14.57	4213	2.0960	0.209	-0.636	0.394	1.607	0.844
350T125-97	0.1017	50	0.608	2.07	1.243	0.645	1.430	0.081	0.366	1.243	0.645	21.69	6383	2.0960	0.209	-0.636	0.394	1.607	0.844
350T150-27	0.0283	33	0.184	0.63	0.377	0.207	1.432	0.041	0.470	0.298	0.132	2.62	590	0.0491	0.094	-0.869	0.529	1.739	0.751
350T150-30	0.0312	33	0.203	0.69	0.416	0.228	1.432	0.045	0.470	0.336	0.150	2.96	790	0.0658	0.103	-0.867	0.528	1.739	0.751
350T150-33	0.0346	33	0.225	0.76	0.461	0.253	1.432	0.049	0.469	0.382	0.171	3.39	1024	0.0897	0.114	-0.866	0.527	1.738	0.752
350T150-43	0.0451	33	0.293	1.00	0.601	0.329	1.433	0.064	0.467	0.531	0.243	4.80	1739	0.1985	0.148	-0.861	0.525	1.736	0.754
350T150-54	0.0566	33	0.367	1.25	0.762	0.412	1.440	0.079	0.465	0.712	0.332	6.57	2392	0.3921	0.187	-0.855	0.521	1.738	0.758
350T150-54	0.0566	50	0.367	1.25	0.762	0.412	1.440	0.079	0.465	0.679	0.310	9.28	3372	0.3921	0.187	-0.855	0.521	1.738	0.758
350T150-68	0.0713	33	0.462	1.57	0.972	0.518	1.450	0.099	0.462	0.957	0.459	9.07	2994	0.7835	0.238	-0.847	0.516	1.742	0.763
350T150-68	0.0713	50	0.462	1.57	0.972	0.518	1.450	0.099	0.462	0.919	0.428	12.81	4536	0.7835	0.238	-0.847	0.516	1.742	0.763
350T150-97	0.1017	33	0.659	2.24	1.423	0.738	1.469	0.137	0.456	1.422	0.738	16.33	4213	2.2713	0.346	-0.831	0.506	1.749	0.774
350T150-97	0.1017	50	0.659	2.24	1.423	0.738	1.469	0.137	0.456	1.422	0.701	20.98	6383	2.2713	0.346	-0.831	0.506	1.749	0.774
350T200-33	0.0346	33	0.259	0.88	0.574	0.315	1.488	0.108	0.646	0.428	0.181	3.57	1024	0.1035	0.249	-1.285	0.761	2.069	0.614
350T200-43	0.0451	33	0.338	1.15	0.749	0.409	1.489	0.140	0.645	0.601	0.257	5.09	1739	0.2291	0.323	-1.280	0.758	2.067	0.616
350T200-54	0.0566	33	0.424	1.44	0.949	0.513	1.497	0.175	0.642	0.814	0.355	7.01	2392	0.4526	0.409	-1.273	0.754	2.067	0.621
350T200-54	0.0566	50	0.424	1.44	0.949	0.513	1.497	0.175	0.642	0.770	0.329	9.85	3372	0.4526	0.409	-1.273	0.754	2.067	0.621
350T200-68	0.0713	33	0.534	1.82	1.213	0.647	1.508	0.218	0.639	1.112	0.496	9.80	2994	0.9043	0.522	-1.264	0.749	2.069	0.627
350T200-68	0.0713	50	0.534	1.82	1.213	0.647	1.508	0.218	0.639	1.054	0.458	13.72	4536	0.9043	0.522	-1.264	0.749	2.069	0.627
350T200-97	0.1017	33	0.761	2.59	1.781	0.924	1.530	0.305	0.633	1.779	0.831	16.42	4213	2.6219	0.765	-1.247	0.738	2.073	0.638
350T200-97	0.1017	50	0.761	2.59	1.781	0.924	1.530	0.305	0.633	1.708	0.769	23.02	6383	2.6219	0.765	-1.247	0.738	2.073	0.638
362T125-18	0.0188	33	0.115	0.39	0.238	0.127	1.437	0.017	0.380	0.189	0.064	1.26	167	0.0136	0.042	-0.665	0.413	1.628	0.833
362T125-27	0.0283	33	0.173	0.59	0.358	0.191	1.438	0.025	0.378	0.301	0.135	2.66	569	0.0463	0.062	-0.661	0.411	1.627	0.835
362T125-30	0.0312	33	0.191	0.65	0.395	0.210	1.438	0.027	0.378	0.339	0.152	3.01	762	0.0620	0.068	-0.659	0.410	1.627	0.836
362T125-33	0.0346	33	0.212	0.72	0.438	0.232	1.439	0.030	0.377	0.385	0.174	3.44	1024	0.0845	0.076	-0.658	0.410	1.626	0.836
362T125-43	0.0451	33	0.276	0.94	0.571	0.302	1.439	0.039	0.375	0.531	0.245	4.84	1739	0.1870	0.098	-0.654	0.407	1.625	0.838
362T125-54	0.0566	33	0.346	1.18	0.723	0.378	1.445	0.048	0.373	0.705	0.332	6.57	2480	0.3695	0.123	-0.648	0.404	1.627	0.841
362T125-54	0.0566	50	0.346	1.18	0.723	0.378	1.445	0.048	0.373	0.678	0.312	9.34	3372	0.3695	0.123	-0.648	0.404	1.627	0.841
362T125-68	0.0713	33	0.436	1.48	0.921	0.475	1.454	0.060	0.370	0.921	0.453	8.96	3104	0.7382	0.156	-0.641	0.399	1.631	0.846
362T125-68	0.0713	50	0.436	1.48	0.921	0.475	1.454	0.060	0.370	0.908	0.427	12.78	4703	0.7382	0.156	-0.641	0.399	1.631	0.846
362T125-97	0.1017	33	0.621	2.11	1.344	0.675	1.471	0.082	0.364	1.343	0.675	15.25	4339	2.1398	0.226	-0.626	0.390	1.640	0.854
362T125-97	0.1017	50	0.621	2.11	1.344	0.675	1.471	0.082	0.364	1.343	0.675	22.70	6574	2.1398	0.226	-0.626	0.390	1.640	0.854

[1] Web-height to thickness ratio exceeds 200. Web stiffeners are required at all support points and concentrated loads.

See Section Properties Table Notes on page 5.

SFIA
STEEL FRAMING INDUSTRY ASSOCIATION

(T) Track Section Properties

	Design		Gross Properties							Effective Properties				Torsional Properties					
Member	Thickness (in)	Fy (ksi)	Area (in^2)	Weight (lb/ft)	I_x (in^4)	S_x (in^3)	R_x (in)	I_y (in^4)	R_y (in)	I_x (in^4)	S_x (in^3)	M_a (in-k)	Va_g (lb)	J x 1000 (in^4)	C_w (in^6)	X_o (in)	m (in)	R_o (in)	β
362T150-27	0.0283	33	0.187	0.64	0.408	0.217	1.475	0.041	0.468	0.323	0.140	2.76	569	0.0500	0.102	-0.857	0.524	1.769	0.765
362T150-30	0.0312	33	0.207	0.70	0.450	0.239	1.475	0.045	0.467	0.364	0.158	3.12	762	0.0670	0.112	-0.856	0.523	1.768	0.766
362T150-33	0.0346	33	0.229	0.78	0.499	0.264	1.475	0.050	0.467	0.414	0.180	3.56	1024	0.0914	0.124	-0.854	0.522	1.768	0.766
362T150-43	0.0451	33	0.298	1.02	0.650	0.344	1.476	0.064	0.465	0.575	0.255	5.04	1739	0.2023	0.160	-0.850	0.519	1.766	0.768
362T150-54	0.0566	33	0.374	1.27	0.823	0.431	1.483	0.080	0.462	0.770	0.349	6.89	2480	0.3997	0.202	-0.844	0.516	1.768	0.772
362T150-54	0.0566	50	0.374	1.27	0.823	0.431	1.483	0.080	0.462	0.735	0.325	9.74	3372	0.3997	0.202	-0.844	0.516	1.768	0.772
362T150-68	0.0713	33	0.471	1.60	1.050	0.542	1.493	0.100	0.460	1.034	0.481	9.50	3104	0.7986	0.257	-0.836	0.511	1.771	0.777
362T150-68	0.0713	50	0.471	1.60	1.050	0.542	1.493	0.100	0.460	0.993	0.449	13.43	4703	0.7986	0.257	-0.836	0.511	1.771	0.777
362T150-97	0.1017	33	0.672	2.28	1.535	0.771	1.512	0.138	0.453	1.535	0.771	17.07	4339	2.3152	0.374	-0.820	0.501	1.779	0.787
362T150-97	0.1017	50	0.672	2.28	1.535	0.771	1.512	0.138	0.453	1.535	0.733	21.94	6574	2.3152	0.374	-0.820	0.501	1.779	0.787
362T200-33	0.0346	33	0.264	0.90	0.619	0.329	1.533	0.110	0.645	0.464	0.190	3.76	1024	0.1052	0.269	-1.270	0.754	2.092	0.631
362T200-43	0.0451	33	0.343	1.17	0.808	0.427	1.534	0.142	0.643	0.650	0.270	5.34	1739	0.2329	0.350	-1.265	0.752	2.090	0.633
362T200-54	0.0566	33	0.431	1.47	1.024	0.536	1.542	0.177	0.640	0.879	0.372	7.36	2480	0.4601	0.442	-1.259	0.748	2.091	0.638
362T200-54	0.0566	50	0.431	1.47	1.024	0.536	1.542	0.177	0.640	0.832	0.345	10.34	3372	0.4601	0.442	-1.259	0.748	2.091	0.638
362T200-68	0.0713	33	0.543	1.85	1.308	0.675	1.552	0.221	0.638	1.199	0.519	10.26	3104	0.9194	0.564	-1.250	0.743	2.093	0.643
362T200-68	0.0713	50	0.543	1.85	1.308	0.675	1.552	0.221	0.638	1.138	0.480	14.38	4703	0.9194	0.564	-1.250	0.743	2.093	0.643
362T200-97	0.1017	33	0.773	2.63	1.917	0.963	1.575	0.308	0.632	1.916	0.868	17.14	4339	2.6658	0.825	-1.232	0.732	2.097	0.655
362T200-97	0.1017	50	0.773	2.63	1.917	0.963	1.575	0.308	0.632	1.840	0.804	24.06	6574	2.6658	0.825	-1.232	0.732	2.097	0.655
400T125-18[1]	0.0188	33	0.122	0.42	0.298	0.145	1.562	0.017	0.374	0.241	0.070	1.39	151	0.0144	0.052	-0.637	0.400	1.727	0.864
400T125-27	0.0283	33	0.184	0.63	0.449	0.217	1.562	0.025	0.372	0.380	0.156	3.08	515	0.0491	0.078	-0.633	0.398	1.726	0.866
400T125-30	0.0312	33	0.203	0.69	0.495	0.239	1.563	0.028	0.371	0.427	0.176	3.49	689	0.0658	0.085	-0.632	0.397	1.726	0.866
400T125-33	0.0346	33	0.225	0.76	0.549	0.265	1.563	0.031	0.371	0.484	0.201	3.97	940	0.0897	0.095	-0.630	0.396	1.725	0.867
400T125-43	0.0451	33	0.293	1.00	0.716	0.344	1.564	0.040	0.369	0.666	0.282	5.57	1739	0.1985	0.122	-0.626	0.394	1.724	0.868
400T125-54	0.0566	33	0.367	1.25	0.904	0.431	1.569	0.049	0.366	0.883	0.381	7.53	2739	0.3921	0.154	-0.621	0.390	1.727	0.871
400T125-54	0.0566	50	0.367	1.25	0.904	0.431	1.569	0.049	0.366	0.850	0.359	10.74	3372	0.3921	0.154	-0.621	0.390	1.727	0.871
400T125-68	0.0713	33	0.462	1.57	1.151	0.541	1.577	0.061	0.364	1.150	0.517	10.22	3435	0.7835	0.194	-0.614	0.386	1.731	0.874
400T125-68	0.0713	50	0.462	1.57	1.151	0.541	1.577	0.061	0.364	1.134	0.488	14.62	5205	0.7835	0.194	-0.614	0.386	1.731	0.874
400T125-97	0.1017	33	0.659	2.24	1.674	0.768	1.594	0.084	0.358	1.673	0.768	17.36	4842	2.2713	0.280	-0.600	0.377	1.740	0.881
400T125-97	0.1017	50	0.659	2.24	1.674	0.768	1.594	0.084	0.358	1.673	0.768	25.84	7337	2.2713	0.280	-0.600	0.377	1.740	0.881
400T150-27	0.0283	33	0.198	0.67	0.509	0.246	1.602	0.042	0.461	0.409	0.154	3.04	515	0.0529	0.127	-0.824	0.509	1.860	0.804
400T150-30	0.0312	33	0.218	0.74	0.561	0.271	1.603	0.046	0.461	0.458	0.183	3.61	689	0.0708	0.140	-0.823	0.508	1.860	0.804
400T150-33	0.0346	33	0.242	0.82	0.622	0.300	1.603	0.051	0.460	0.519	0.208	4.12	940	0.0966	0.155	-0.821	0.507	1.859	0.805
400T150-43	0.0451	33	0.315	1.07	0.811	0.390	1.604	0.066	0.458	0.719	0.293	5.80	1739	0.2138	0.200	-0.817	0.504	1.857	0.807
400T150-54	0.0566	33	0.396	1.35	1.026	0.489	1.610	0.082	0.456	0.960	0.399	7.89	2739	0.4223	0.252	-0.811	0.501	1.860	0.810
400T150-54	0.0566	50	0.396	1.35	1.026	0.489	1.610	0.082	0.456	0.918	0.374	11.19	3372	0.4223	0.252	-0.811	0.501	1.860	0.810
400T150-68	0.0713	33	0.498	1.69	1.306	0.615	1.619	0.102	0.453	1.286	0.548	10.82	3435	0.8439	0.320	-0.804	0.496	1.864	0.814
400T150-68	0.0713	50	0.498	1.69	1.306	0.615	1.619	0.102	0.453	1.237	0.513	15.36	5205	0.8439	0.320	-0.804	0.496	1.864	0.814
400T150-97	0.1017	33	0.710	2.41	1.904	0.874	1.638	0.142	0.447	1.904	0.874	19.35	4842	2.4466	0.463	-0.788	0.487	1.872	0.823
400T150-97	0.1017	50	0.710	2.41	1.904	0.874	1.638	0.142	0.447	1.904	0.832	24.92	7337	2.4466	0.463	-0.788	0.487	1.872	0.823
400T200-33	0.0346	33	0.277	0.94	0.768	0.371	1.666	0.113	0.639	0.581	0.220	4.34	940	0.1104	0.336	-1.229	0.737	2.167	0.678
400T200-43	0.0451	33	0.360	1.23	1.002	0.482	1.668	0.146	0.637	0.811	0.311	6.14	1739	0.2443	0.436	-1.224	0.734	2.164	0.680
400T200-54	0.0566	33	0.452	1.54	1.268	0.604	1.675	0.182	0.635	1.093	0.426	8.42	2739	0.4828	0.551	-1.217	0.730	2.166	0.684
400T200-54	0.0566	50	0.452	1.54	1.268	0.604	1.675	0.182	0.635	1.037	0.397	11.88	3372	0.4828	0.551	-1.217	0.730	2.166	0.684
400T200-68	0.0713	33	0.569	1.94	1.617	0.761	1.685	0.227	0.632	1.486	0.591	11.68	3435	0.9647	0.702	-1.209	0.725	2.168	0.689
400T200-68	0.0713	50	0.569	1.94	1.617	0.761	1.685	0.227	0.632	1.412	0.549	16.43	5205	0.9647	0.702	-1.209	0.725	2.168	0.689
400T200-97	0.1017	33	0.811	2.76	2.364	1.085	1.707	0.318	0.626	2.361	0.981	19.38	4842	2.7973	1.022	-1.192	0.715	2.174	0.699
400T200-97	0.1017	50	0.811	2.76	2.364	1.085	1.707	0.318	0.626	2.269	0.911	27.29	7337	2.7973	1.022	-1.192	0.715	2.174	0.699
550T125-27	0.0283	33	0.226	0.77	0.948	0.336	2.046	0.027	0.348	0.786	0.192	3.79	372	0.0604	0.160	-0.543	0.352	2.146	0.936
550T125-30	0.0312	33	0.250	0.85	1.045	0.371	2.047	0.030	0.347	0.897	0.226	4.47	499	0.0810	0.176	-0.542	0.351	2.145	0.936
550T125-33	0.0346	33	0.277	0.94	1.159	0.411	2.047	0.033	0.346	1.029	0.270	5.33	680	0.1104	0.195	-0.541	0.350	2.145	0.936
550T125-43	0.0451	33	0.360	1.23	1.510	0.534	2.047	0.043	0.344	1.428	0.417	8.23	1504	0.2443	0.252	-0.537	0.348	2.144	0.937
550T125-54	0.0566	33	0.452	1.54	1.904	0.668	2.052	0.053	0.342	1.862	0.597	11.80	2739	0.4828	0.315	-0.532	0.345	2.147	0.939
550T125-54	0.0566	50	0.452	1.54	1.904	0.668	2.052	0.053	0.342	1.811	0.535	16.01	2980	0.4828	0.315	-0.532	0.345	2.147	0.939
550T125-68	0.0713	33	0.569	1.94	2.413	0.839	2.059	0.066	0.340	2.412	0.807	15.95	4347	0.9647	0.397	-0.526	0.341	2.152	0.940
550T125-68	0.0713	50	0.569	1.94	2.413	0.839	2.059	0.066	0.340	2.380	0.769	23.02	5350	0.9647	0.397	-0.526	0.341	2.152	0.940
550T125-97	0.1017	33	0.811	2.76	3.484	1.190	2.072	0.090	0.334	3.484	1.190	26.87	6730	2.7973	0.564	-0.514	0.333	2.161	0.943
550T125-97	0.1017	50	0.811	2.76	3.484	1.190	2.072	0.090	0.334	3.484	1.190	40.01	10197	2.7973	0.564	-0.514	0.333	2.161	0.943
550T150-27	0.0283	33	0.241	0.82	1.059	0.376	2.099	0.046	0.436	0.893	0.207	4.10	372	0.0642	0.263	-0.716	0.456	2.260	0.900
550T150-30	0.0312	33	0.265	0.90	1.168	0.414	2.099	0.050	0.435	0.995	0.251	4.96	499	0.0860	0.289	-0.715	0.455	2.259	0.900
550T150-33	0.0346	33	0.294	1.00	1.295	0.459	2.099	0.055	0.434	1.115	0.310	6.12	680	0.1173	0.320	-0.714	0.455	2.259	0.900
550T150-43	0.0451	33	0.383	1.30	1.688	0.596	2.100	0.072	0.432	1.516	0.468	9.25	1504	0.2596	0.414	-0.709	0.452	2.258	0.901
550T150-54	0.0566	33	0.480	1.63	2.129	0.747	2.105	0.089	0.430	2.005	0.628	12.41	2739	0.5130	0.519	-0.704	0.449	2.261	0.903
550T150-54	0.0566	50	0.480	1.63	2.129	0.747	2.105	0.089	0.430	1.928	0.595	17.81	2980	0.5130	0.519	-0.704	0.449	2.261	0.903
550T150-68	0.0713	33	0.605	2.06	2.700	0.939	2.113	0.111	0.427	2.661	0.850	16.80	4347	1.0251	0.655	-0.698	0.445	2.266	0.905
550T150-68	0.0713	50	0.605	2.06	2.700	0.939	2.113	0.111	0.427	2.569	0.804	24.07	5350	1.0251	0.655	-0.698	0.445	2.266	0.905
550T150-97	0.1017	33	0.862	2.93	3.905	1.334	2.128	0.153	0.421	3.905	1.334	29.52	6730	2.9726	0.937	-0.684	0.436	2.275	0.909
550T150-97	0.1017	50	0.862	2.93	3.905	1.334	2.128	0.153	0.421	3.905	1.278	38.28	10197	2.9726	0.937	-0.684	0.436	2.275	0.909

[1] Web-height to thickness ratio exceeds 200. Web stiffeners are required at all support points and concentrated loads.

See Section Properties Table Notes on page 5.

(T) Track Section Properties

Member	Design Thickness (in)	Fy (ksi)	Gross Properties Area (in^2)	Weight (lb/ft)	I_x (in^4)	S_x (in^3)	R_x (in)	I_y (in^4)	R_y (in)	Effective Properties I_x (in^4)	S_x (in^3)	M_a (in-k)	Va_g (lb)	Torsional Properties J x 1000 (in^4)	C_w (in^6)	X_o (in)	m (in)	R_o (in)	β
550T200-33	0.0346	33	0.329	1.12	1.567	0.555	2.184	0.123	0.613	1.246	0.307	6.06	680	0.1311	0.694	-1.088	0.674	2.516	0.813
550T200-43	0.0451	33	0.428	1.46	2.044	0.722	2.185	0.160	0.611	1.690	0.495	9.79	1504	0.2902	0.900	-1.083	0.671	2.514	0.814
550T200-54	0.0566	33	0.537	1.83	2.579	0.905	2.191	0.199	0.609	2.254	0.669	13.21	2739	0.5734	1.133	-1.077	0.668	2.517	0.817
550T200-54	0.0566	50	0.537	1.83	2.579	0.905	2.191	0.199	0.609	2.153	0.630	18.86	2980	0.5734	1.133	-1.077	0.668	2.517	0.817
550T200-68	0.0713	33	0.676	2.30	3.275	1.139	2.201	0.248	0.606	3.027	0.914	18.06	4347	1.1459	1.434	-1.070	0.663	2.521	0.820
550T200-68	0.0713	50	0.676	2.30	3.275	1.139	2.201	0.248	0.606	2.895	0.857	25.67	5350	1.1459	1.434	-1.070	0.663	2.521	0.820
550T200-97	0.1017	33	0.964	3.28	4.747	1.621	2.219	0.347	0.600	4.736	1.483	29.30	6730	3.3232	2.067	-1.055	0.653	2.529	0.826
550T200-97	0.1017	50	0.964	3.28	4.747	1.621	2.219	0.347	0.600	4.567	1.391	41.64	10197	3.3232	2.067	-1.055	0.653	2.529	0.826
600T125-27[1]	0.0283	33	0.241	0.82	1.169	0.381	2.204	0.028	0.340	0.958	0.211	4.16	341	0.0642	0.196	-0.519	0.339	2.290	0.949
600T125-30	0.0312	33	0.265	0.90	1.288	0.420	2.204	0.031	0.340	1.095	0.249	4.92	456	0.0860	0.215	-0.518	0.338	2.290	0.949
600T125-33	0.0346	33	0.294	1.00	1.429	0.465	2.205	0.034	0.339	1.258	0.297	5.87	622	0.1173	0.238	-0.516	0.337	2.289	0.949
600T125-43	0.0451	33	0.383	1.30	1.862	0.604	2.205	0.044	0.337	1.768	0.461	9.11	1377	0.2596	0.307	-0.513	0.335	2.289	0.950
600T125-54	0.0566	33	0.480	1.63	2.345	0.757	2.209	0.054	0.335	2.299	0.666	13.15	2728	0.5130	0.384	-0.508	0.332	2.292	0.951
600T125-54	0.0566	50	0.480	1.63	2.345	0.757	2.209	0.054	0.335	2.241	0.592	17.74	2728	0.5130	0.384	-0.508	0.332	2.292	0.951
600T125-68	0.0713	33	0.605	2.06	2.970	0.951	2.216	0.067	0.332	2.969	0.916	18.09	4347	1.0251	0.483	-0.503	0.329	2.296	0.952
600T125-68	0.0713	50	0.605	2.06	2.970	0.951	2.216	0.067	0.332	2.934	0.858	25.69	5350	1.0251	0.483	-0.503	0.329	2.296	0.952
600T125-97	0.1017	33	0.862	2.93	4.282	1.348	2.229	0.092	0.327	4.281	1.347	30.43	7359	2.9726	0.685	-0.491	0.321	2.305	0.955
600T125-97	0.1017	50	0.862	2.93	4.282	1.348	2.229	0.092	0.327	4.281	1.347	40.33	10885	2.9726	0.685	-0.491	0.321	2.305	0.955
600T150-27[1]	0.0283	33	0.255	0.87	1.301	0.424	2.260	0.047	0.427	1.012	0.214	4.23	341	0.0680	0.320	-0.686	0.441	2.400	0.918
600T150-30	0.0312	33	0.281	0.96	1.434	0.467	2.260	0.051	0.427	1.159	0.253	5.01	456	0.0911	0.352	-0.685	0.440	2.400	0.918
600T150-33	0.0346	33	0.311	1.06	1.590	0.517	2.260	0.057	0.426	1.335	0.303	5.99	622	0.1242	0.390	-0.684	0.439	2.400	0.919
600T150-43	0.0451	33	0.405	1.38	2.073	0.673	2.261	0.073	0.424	1.890	0.474	9.36	1377	0.2749	0.504	-0.680	0.437	2.399	0.920
600T150-54	0.0566	33	0.509	1.73	2.612	0.843	2.266	0.091	0.422	2.473	0.689	13.62	2728	0.5432	0.632	-0.675	0.434	2.402	0.921
600T150-54	0.0566	50	0.509	1.73	2.612	0.843	2.266	0.091	0.422	2.400	0.609	18.24	2728	0.5432	0.632	-0.675	0.434	2.402	0.921
600T150-68	0.0713	33	0.641	2.18	3.310	1.059	2.273	0.113	0.419	3.262	0.963	19.03	4347	1.0855	0.797	-0.669	0.430	2.406	0.923
600T150-68	0.0713	50	0.641	2.18	3.310	1.059	2.273	0.113	0.419	3.162	0.891	26.68	5350	1.0855	0.797	-0.669	0.430	2.406	0.923
600T150-97	0.1017	33	0.913	3.11	4.780	1.504	2.288	0.156	0.414	4.779	1.504	29.71	7359	3.1479	1.138	-0.656	0.421	2.416	0.926
600T150-97	0.1017	50	0.913	3.11	4.780	1.504	2.288	0.156	0.414	4.779	1.444	43.24	10885	3.1479	1.138	-0.656	0.421	2.416	0.926
600T200-33	0.0346	33	0.346	1.18	1.913	0.623	2.352	0.126	0.604	1.542	0.333	6.59	622	0.1380	0.847	-1.048	0.655	2.645	0.843
600T200-43	0.0451	33	0.451	1.53	2.494	0.810	2.353	0.163	0.602	2.076	0.565	11.16	1377	0.3055	1.098	-1.044	0.652	2.644	0.844
600T200-54	0.0566	33	0.565	1.92	3.146	1.015	2.359	0.203	0.600	2.760	0.759	15.00	2728	0.6037	1.381	-1.038	0.649	2.646	0.846
600T200-54	0.0566	50	0.565	1.92	3.146	1.015	2.359	0.203	0.600	2.641	0.717	21.48	2728	0.6037	1.381	-1.038	0.649	2.646	0.846
600T200-68	0.0713	33	0.712	2.42	3.991	1.277	2.368	0.254	0.597	3.696	1.034	20.42	4347	1.2064	1.746	-1.031	0.644	2.651	0.849
600T200-68	0.0713	50	0.712	2.42	3.991	1.277	2.368	0.254	0.597	3.540	0.973	29.12	5350	1.2064	1.746	-1.031	0.644	2.651	0.849
600T200-97	0.1017	33	1.015	3.45	5.774	1.817	2.385	0.355	0.591	5.759	1.667	32.95	7359	3.4985	2.510	-1.016	0.635	2.659	0.854
600T200-97	0.1017	50	1.015	3.45	5.774	1.817	2.385	0.355	0.591	5.559	1.568	46.95	10885	3.4985	2.510	-1.016	0.635	2.659	0.854
800T125-33[1]	0.0346	33	0.363	1.24	2.897	0.711	2.824	0.036	0.313	2.442	0.407	8.03	465	0.1449	0.456	-0.439	0.294	2.875	0.977
800T125-43	0.0451	33	0.473	1.61	3.774	0.925	2.824	0.046	0.311	3.484	0.640	12.65	1030	0.3208	0.589	-0.436	0.292	2.875	0.977
800T125-54	0.0566	33	0.594	2.02	4.747	1.158	2.828	0.057	0.309	4.668	0.940	18.58	2039	0.6339	0.735	-0.432	0.289	2.877	0.977
800T125-54	0.0566	50	0.594	2.02	4.747	1.158	2.828	0.057	0.309	4.427	0.824	24.66	2039	0.6339	0.735	-0.432	0.289	2.877	0.977
800T125-68	0.0713	33	0.748	2.54	6.000	1.455	2.833	0.070	0.307	5.998	1.357	26.81	4087	1.2668	0.920	-0.427	0.286	2.881	0.978
800T125-68	0.0713	50	0.748	2.54	6.000	1.455	2.833	0.070	0.307	5.956	1.216	36.40	4087	1.2668	0.920	-0.427	0.286	2.881	0.978
800T125-97	0.1017	33	1.066	3.63	8.617	2.062	2.844	0.097	0.301	8.614	2.062	40.74	8843	3.6738	1.296	-0.417	0.279	2.890	0.979
800T125-97	0.1017	50	1.066	3.63	8.617	2.062	2.844	0.097	0.301	8.614	2.062	61.72	10885	3.6738	1.296	-0.417	0.279	2.890	0.979
800T150-33[1]	0.0346	33	0.380	1.29	3.181	0.781	2.892	0.060	0.397	2.570	0.414	8.18	465	0.1518	0.751	-0.588	0.388	2.977	0.961
800T150-43	0.0451	33	0.496	1.69	4.145	1.016	2.892	0.077	0.395	3.690	0.655	12.95	1030	0.3361	0.972	-0.584	0.386	2.977	0.961
800T150-54	0.0566	33	0.622	2.12	5.216	1.272	2.896	0.096	0.393	4.977	0.969	19.15	2039	0.6641	1.215	-0.580	0.383	2.980	0.962
800T150-54	0.0566	50	0.622	2.12	5.216	1.272	2.896	0.096	0.393	4.693	0.844	25.27	2039	0.6641	1.215	-0.580	0.383	2.980	0.962
800T150-68	0.0713	33	0.783	2.66	6.596	1.599	2.902	0.119	0.390	6.527	1.412	27.91	4087	1.3272	1.526	-0.575	0.379	2.984	0.963
800T150-68	0.0713	50	0.783	2.66	6.596	1.599	2.902	0.119	0.390	6.361	1.255	37.58	4087	1.3272	1.526	-0.575	0.379	2.984	0.963
800T150-97	0.1017	33	1.116	3.80	9.483	2.270	2.914	0.165	0.385	9.480	2.269	44.83	8843	3.8491	2.162	-0.564	0.372	2.993	0.965
800T150-97	0.1017	50	1.116	3.80	9.483	2.270	2.914	0.165	0.385	9.480	2.192	65.62	10885	3.8491	2.162	-0.564	0.372	2.993	0.965
800T200-33[1]	0.0346	33	0.415	1.41	3.750	0.921	3.006	0.135	0.571	2.789	0.424	8.37	465	0.1656	1.638	-0.917	0.589	3.194	0.918
800T200-43	0.0451	33	0.541	1.84	4.888	1.198	3.006	0.175	0.569	4.044	0.676	13.35	1030	0.3667	2.124	-0.913	0.587	3.193	0.918
800T200-54	0.0566	33	0.679	2.31	6.154	1.501	3.012	0.218	0.567	5.506	1.009	19.93	2039	0.7245	2.664	-0.908	0.584	3.196	0.919
800T200-54	0.0566	50	0.679	2.31	6.154	1.501	3.012	0.218	0.567	5.151	0.872	26.09	2039	0.7245	2.664	-0.908	0.584	3.196	0.919
800T200-68	0.0713	33	0.854	2.91	7.789	1.888	3.019	0.272	0.564	7.306	1.490	29.45	4087	1.4480	3.357	-0.902	0.580	3.201	0.921
800T200-68	0.0713	50	0.854	2.91	7.789	1.888	3.019	0.272	0.564	7.053	1.310	39.22	4087	1.4480	3.357	-0.902	0.580	3.201	0.921
800T200-97	0.1017	33	1.218	4.14	11.215	2.684	3.034	0.379	0.558	11.177	2.491	49.22	8843	4.1998	4.792	-0.889	0.571	3.211	0.923
800T200-97	0.1017	50	1.218	4.14	11.215	2.684	3.034	0.379	0.558	10.834	2.347	70.28	10885	4.1998	4.792	-0.889	0.571	3.211	0.923
1000T125-43[1]	0.0451	33	0.563	1.92	6.633	1.306	3.431	0.047	0.290	5.887	0.819	16.19	822	0.3819	0.973	-0.379	0.259	3.465	0.988
1000T125-54	0.0566	33	0.707	2.40	8.337	1.635	3.434	0.059	0.288	7.961	1.216	24.03	1628	0.7548	1.212	-0.376	0.256	3.467	0.988
1000T125-54	0.0566	50	0.707	2.40	8.337	1.635	3.434	0.059	0.288	7.480	1.055	31.59	1628	0.7548	1.212	-0.376	0.256	3.467	0.988
1000T125-68	0.0713	33	0.890	3.03	10.526	2.054	3.439	0.073	0.286	10.453	1.781	35.19	3261	1.5084	1.515	-0.372	0.253	3.471	0.989
1000T125-68	0.0713	50	0.890	3.03	10.526	2.054	3.439	0.073	0.286	10.156	1.575	47.15	3261	1.5084	1.515	-0.372	0.253	3.471	0.989
1000T125-97	0.1017	33	1.269	4.32	15.083	2.913	3.448	0.100	0.281	15.077	2.907	57.44	8843	4.3751	2.123	-0.363	0.247	3.478	0.989
1000T125-97	0.1017	50	1.269	4.32	15.083	2.913	3.448	0.100	0.281	15.077	2.753	82.42	9507	4.3751	2.123	-0.363	0.247	3.478	0.989

[1] Web-height to thickness ratio exceeds 200. Web stiffeners are required at all support points and concentrated loads.

See Section Properties Table Notes on page 5.

SFIA
STEEL FRAMING INDUSTRY ASSOCIATION

(T) Track Section Properties

	Design		Gross Properties							Effective Properties				Torsional Properties					
Member	Thickness (in)	Fy (ksi)	Area (in^2)	Weight (lb/ft)	I_x (in^4)	S_x (in^3)	R_x (in)	I_y (in^4)	R_y (in)	I_x (in^4)	S_x (in^3)	M_a (in-k)	Va_g (lb)	J x 1000 (in^4)	C_w (in^6)	X_o (in)	m (in)	R_o (in)	β
1000T150-43[1]	0.0451	33	0.586	1.99	7.210	1.419	3.508	0.080	0.370	6.197	0.837	16.54	822	0.3972	1.612	-0.513	0.345	3.565	0.979
1000T150-54	0.0566	33	0.735	2.50	9.065	1.778	3.512	0.100	0.368	8.433	1.249	24.69	1628	0.7850	2.013	-0.509	0.342	3.567	0.980
1000T150-54	0.0566	50	0.735	2.50	9.065	1.778	3.512	0.100	0.368	7.881	1.079	32.30	1628	0.7850	2.013	-0.509	0.342	3.567	0.980
1000T150-68	0.0713	33	0.926	3.15	11.450	2.234	3.517	0.124	0.366	11.343	1.846	36.48	3261	1.5688	2.522	-0.505	0.339	3.572	0.980
1000T150-68	0.0713	50	0.926	3.15	11.450	2.234	3.517	0.124	0.366	10.776	1.621	48.53	3261	1.5688	2.522	-0.505	0.339	3.572	0.980
1000T150-97	0.1017	33	1.320	4.49	16.420	3.171	3.527	0.172	0.361	16.414	3.165	62.54	8843	4.5504	3.557	-0.495	0.332	3.580	0.981
1000T150-97	0.1017	50	1.320	4.49	16.420	3.171	3.527	0.172	0.361	16.414	2.903	86.90	9507	4.5504	3.557	-0.495	0.332	3.580	0.981
1000T200-43[1]	0.0451	33	0.631	2.15	8.364	1.646	3.641	0.183	0.539	6.724	0.861	17.01	822	0.4278	3.540	-0.813	0.534	3.769	0.953
1000T200-54	0.0566	33	0.792	2.69	10.520	2.063	3.645	0.228	0.537	9.232	1.295	25.60	1628	0.8454	4.434	-0.809	0.531	3.772	0.954
1000T200-54	0.0566	50	0.792	2.69	10.520	2.063	3.645	0.228	0.537	8.563	1.111	33.26	1628	0.8454	4.434	-0.809	0.531	3.772	0.954
1000T200-68	0.0713	33	0.997	3.39	13.296	2.595	3.652	0.284	0.534	12.553	1.936	38.26	3261	1.6896	5.576	-0.803	0.527	3.777	0.955
1000T200-68	0.0713	50	0.997	3.39	13.296	2.595	3.652	0.284	0.534	11.821	1.684	50.42	3261	1.6896	5.576	-0.803	0.527	3.777	0.955
1000T200-97	0.1017	33	1.422	4.84	19.093	3.687	3.665	0.397	0.528	19.032	3.427	67.72	8843	4.9010	7.924	-0.791	0.519	3.786	0.956
1000T200-97	0.1017	50	1.422	4.84	19.093	3.687	3.665	0.397	0.528	18.584	3.081	92.26	9507	4.9010	7.924	-0.791	0.519	3.786	0.956
1200T125-54[1]	0.0566	33	0.820	2.79	13.341	2.187	4.034	0.060	0.271	12.297	1.492	29.47	1354	0.8756	1.820	-0.333	0.230	4.056	0.993
1200T125-54[1]	0.0566	50	0.820	2.79	13.341	2.187	4.034	0.060	0.271	11.463	1.286	38.51	1354	0.8756	1.820	-0.333	0.230	4.056	0.993
1200T125-68	0.0713	33	1.033	3.51	16.834	2.749	4.037	0.074	0.268	16.247	2.206	43.60	2713	1.7501	2.270	-0.329	0.227	4.060	0.993
1200T125-68	0.0713	50	1.033	3.51	16.834	2.749	4.037	0.074	0.268	15.689	1.934	57.90	2713	1.7501	2.270	-0.329	0.227	4.060	0.993
1200T125-97	0.1017	33	1.472	5.01	24.090	3.899	4.045	0.102	0.264	24.078	3.690	72.92	7902	5.0763	3.171	-0.322	0.222	4.066	0.994
1200T125-97	0.1017	50	1.472	5.01	24.090	3.899	4.045	0.102	0.264	23.752	3.443	103.07	7902	5.0763	3.171	-0.322	0.222	4.066	0.994
1200T150-54[1]	0.0566	33	0.848	2.89	14.384	2.358	4.118	0.103	0.348	12.964	1.530	30.23	1354	0.9059	3.033	-0.454	0.310	4.157	0.988
1200T150-54[1]	0.0566	50	0.848	2.89	14.384	2.358	4.118	0.103	0.348	12.023	1.313	39.32	1354	0.9059	3.033	-0.454	0.310	4.157	0.988
1200T150-68	0.0713	33	1.068	3.63	18.156	2.964	4.122	0.127	0.345	17.570	2.281	45.08	2713	1.8105	3.795	-0.450	0.307	4.161	0.988
1200T150-68	0.0713	50	1.068	3.63	18.156	2.964	4.122	0.127	0.345	16.568	1.987	59.48	2713	1.8105	3.795	-0.450	0.307	4.161	0.988
1200T150-97	0.1017	33	1.523	5.18	25.999	4.208	4.131	0.176	0.340	25.987	3.996	78.97	7902	5.2516	5.335	-0.441	0.301	4.169	0.989
1200T150-97	0.1017	50	1.523	5.18	25.999	4.208	4.131	0.176	0.340	25.720	3.616	108.27	7902	5.2516	5.335	-0.441	0.301	4.169	0.989
1200T200-54[1]	0.0566	33	0.905	3.08	16.470	2.700	4.266	0.236	0.510	14.081	1.582	31.26	1354	0.9663	6.714	-0.730	0.487	4.358	0.972
1200T200-54[1]	0.0566	50	0.905	3.08	16.470	2.700	4.266	0.236	0.510	12.965	1.350	40.42	1354	0.9663	6.714	-0.730	0.487	4.358	0.972
1200T200-68	0.0713	33	1.140	3.88	20.799	3.396	4.272	0.294	0.508	19.282	2.383	47.10	2713	1.9313	8.431	-0.725	0.483	4.363	0.972
1200T200-68	0.0713	50	1.140	3.88	20.799	3.396	4.272	0.294	0.508	18.029	2.058	61.63	2713	1.9313	8.431	-0.725	0.483	4.363	0.972
1200T200-97	0.1017	33	1.625	5.53	29.816	4.826	4.284	0.410	0.502	29.806	4.298	84.93	7902	5.6022	11.945	-0.714	0.476	4.372	0.973
1200T200-97	0.1017	50	1.625	5.53	29.816	4.826	4.284	0.410	0.502	28.962	3.819	114.35	7902	5.6022	11.945	-0.714	0.476	4.372	0.973
1200T200-118	0.1242	33	1.984	6.75	36.544	5.878	4.292	0.492	0.498	36.531	5.795	114.50	13189	10.2007	14.513	-0.706	0.471	4.378	0.974
1200T200-118	0.1242	50	1.984	6.75	36.544	5.878	4.292	0.492	0.498	36.531	5.278	158.03	14434	10.2007	14.513	-0.706	0.471	4.378	0.974
1400T125-54	0.0566	33	0.933	3.17	19.987	2.815	4.628	0.061	0.256	17.728	1.767	34.92	1160	0.9965	2.559	-0.299	0.209	4.645	0.996
1400T125-54	0.0566	50	0.933	3.17	19.987	2.815	4.628	0.061	0.256	16.412	1.517	45.42	1160	0.9965	2.559	-0.299	0.209	4.645	0.996
1400T125-68	0.0713	33	1.175	4.00	25.208	3.538	4.631	0.076	0.254	23.556	2.632	52.02	2322	1.9917	3.189	-0.296	0.206	4.648	0.996
1400T125-68	0.0713	50	1.175	4.00	25.208	3.538	4.631	0.076	0.254	22.623	2.293	68.65	2322	1.9917	3.189	-0.296	0.206	4.648	0.996
1400T125-97	0.1017	33	1.676	5.70	36.043	5.021	4.638	0.104	0.249	35.776	4.480	88.53	6761	5.7776	4.444	-0.289	0.201	4.653	0.996
1400T125-97	0.1017	50	1.676	5.70	36.043	5.021	4.638	0.104	0.249	34.591	4.134	123.77	6761	5.7776	4.444	-0.289	0.201	4.653	0.996
1400T125-118	0.1242	33	2.046	6.96	44.090	6.109	4.642	0.124	0.246	44.068	5.854	115.67	12344	10.5201	5.334	-0.284	0.197	4.657	0.996
1400T125-118	0.1242	50	2.046	6.96	44.090	6.109	4.642	0.124	0.246	43.754	5.454	163.28	12344	10.5201	5.334	-0.284	0.197	4.657	0.996
1400T150-54	0.0566	33	0.962	3.27	21.402	3.015	4.718	0.105	0.330	18.625	1.810	35.76	1160	1.0267	4.280	-0.410	0.283	4.747	0.993
1400T150-54	0.0566	50	0.962	3.27	21.402	3.015	4.718	0.105	0.330	17.156	1.547	46.33	1160	1.0267	4.280	-0.410	0.283	4.747	0.993
1400T150-68	0.0713	33	1.211	4.12	27.000	3.790	4.722	0.130	0.328	25.415	2.717	53.69	2322	2.0521	5.349	-0.407	0.280	4.751	0.993
1400T150-68	0.0713	50	1.211	4.12	27.000	3.790	4.722	0.130	0.328	23.807	2.352	70.42	2322	2.0521	5.349	-0.407	0.280	4.751	0.993
1400T150-97	0.1017	33	1.727	5.87	38.626	5.381	4.730	0.180	0.323	38.342	4.834	95.52	6761	5.9529	7.503	-0.399	0.275	4.757	0.993
1400T150-97	0.1017	50	1.727	5.87	38.626	5.381	4.730	0.180	0.323	37.288	4.332	129.70	6761	5.9529	7.503	-0.399	0.275	4.757	0.993
1400T150-118	0.1242	33	2.108	7.17	47.269	6.549	4.735	0.215	0.319	47.248	6.291	124.31	12344	10.8394	9.048	-0.393	0.270	4.762	0.993
1400T150-118	0.1242	50	2.108	7.17	47.269	6.549	4.735	0.215	0.319	46.913	5.887	176.25	12344	10.8394	9.048	-0.393	0.270	4.762	0.993
1400T200-54	0.0566	33	1.018	3.46	24.232	3.413	4.879	0.242	0.487	20.105	1.868	36.92	1160	1.0872	9.520	-0.665	0.449	4.948	0.982
1400T200-54	0.0566	50	1.018	3.46	24.232	3.413	4.879	0.242	0.487	18.392	1.589	47.57	1160	1.0872	9.520	-0.665	0.449	4.948	0.982
1400T200-68	0.0713	33	1.282	4.36	30.583	4.293	4.884	0.301	0.485	27.710	2.831	55.93	2322	2.1729	11.942	-0.661	0.446	4.952	0.982
1400T200-68	0.0713	50	1.282	4.36	30.583	4.293	4.884	0.301	0.485	25.745	2.432	72.82	2322	2.1729	11.942	-0.661	0.446	4.952	0.982
1400T200-97	0.1017	33	1.828	6.22	43.791	6.101	4.894	0.420	0.479	43.681	5.174	102.25	6761	6.3035	16.883	-0.651	0.439	4.960	0.983
1400T200-97	0.1017	50	1.828	6.22	43.791	6.101	4.894	0.420	0.479	41.756	4.559	136.49	6761	6.3035	16.883	-0.651	0.439	4.960	0.983
1400T200-118	0.1242	33	2.232	7.59	53.628	7.430	4.901	0.505	0.476	53.607	7.062	139.55	12344	11.4780	20.479	-0.644	0.434	4.966	0.983
1400T200-118	0.1242	50	2.232	7.59	53.628	7.430	4.901	0.505	0.476	53.456	6.354	190.25	12344	11.4780	20.479	-0.644	0.434	4.966	0.983
1600T125-54	0.0566	33	1.046	3.56	28.500	3.519	5.219	0.062	0.243	24.292	2.042	40.35	1014	1.1174	3.432	-0.272	0.191	5.232	0.997
1600T125-54	0.0566	50	1.046	3.56	28.500	3.519	5.219	0.062	0.243	22.355	1.748	52.33	1014	1.1174	3.432	-0.272	0.191	5.232	0.997
1600T125-68	0.0713	33	1.318	4.48	35.935	4.423	5.222	0.077	0.241	32.445	3.058	60.42	2030	2.2333	4.273	-0.268	0.189	5.234	0.997
1600T125-68	0.0713	50	1.318	4.48	35.935	4.423	5.222	0.077	0.241	31.009	2.651	79.38	2030	2.2333	4.273	-0.268	0.189	5.234	0.997
1600T125-97	0.1017	33	1.879	6.39	51.349	6.279	5.227	0.105	0.237	49.848	5.273	104.20	5908	6.4788	5.945	-0.262	0.184	5.239	0.997
1600T125-97	0.1017	50	1.879	6.39	51.349	6.279	5.227	0.105	0.237	47.837	4.826	144.48	5908	6.4788	5.945	-0.262	0.184	5.239	0.997
1600T125-118	0.1242	33	2.294	7.81	62.789	7.641	5.231	0.125	0.234	62.756	6.965	137.63	10783	11.7973	7.126	-0.257	0.181	5.243	0.998
1600T125-118	0.1242	50	2.294	7.81	62.789	7.641	5.231	0.125	0.234	60.935	6.420	192.22	10783	11.7973	7.126	-0.257	0.181	5.243	0.998

[1] Web-height to thickness ratio exceeds 200. Web stiffeners are required at all support points and concentrated loads.

See Section Properties Table Notes on page 5.

(T) Track Section Properties

Member	Design Thickness (in)	Fy (ksi)	Gross Properties Area (in^2)	Weight (lb/ft)	I_x (in^4)	S_x (in^3)	R_x (in)	I_y (in^4)	R_y (in)	Effective Properties I_x (in^4)	S_x (in^3)	M_a (in-k)	Va_g (lb)	Torsional Properties J x 1000 (in^4)	C_w (in^6)	X_o (in)	m (in)	R_o (in)	β
1600T150-54	0.0566	33	1.075	3.66	30.343	3.747	5.314	0.106	0.314	25.453	2.090	41.29	1014	1.1476	5.757	-0.374	0.260	5.336	0.995
1600T150-54	0.0566	50	1.075	3.66	30.343	3.747	5.314	0.106	0.314	23.309	1.782	53.34	1014	1.1476	5.757	-0.374	0.260	5.336	0.995
1600T150-68	0.0713	33	1.354	4.60	38.268	4.710	5.317	0.132	0.312	34.949	3.152	62.28	2030	2.2938	7.188	-0.371	0.258	5.339	0.995
1600T150-68	0.0713	50	1.354	4.60	38.268	4.710	5.317	0.132	0.312	32.544	2.717	81.35	2030	2.2938	7.188	-0.371	0.258	5.339	0.995
1600T150-97	0.1017	33	1.930	6.57	54.708	6.690	5.324	0.183	0.308	53.176	5.674	112.13	5908	6.6541	10.066	-0.363	0.253	5.345	0.995
1600T150-97	0.1017	50	1.930	6.57	54.708	6.690	5.324	0.183	0.308	51.389	5.047	151.12	5908	6.6541	10.066	-0.363	0.253	5.345	0.995
1600T150-118	0.1242	33	2.356	8.02	66.919	8.144	5.329	0.218	0.304	66.886	7.460	147.42	10783	12.1166	12.124	-0.358	0.249	5.350	0.996
1600T150-118	0.1242	50	2.356	8.02	66.919	8.144	5.329	0.218	0.304	65.028	6.911	206.93	10783	12.1166	12.124	-0.358	0.249	5.350	0.996
1600T200-54	0.0566	33	1.131	3.85	34.030	4.202	5.485	0.246	0.467	27.343	2.154	42.57	1014	1.2081	12.864	-0.612	0.417	5.538	0.988
1600T200-54	0.0566	50	1.131	3.85	34.030	4.202	5.485	0.246	0.467	24.873	1.827	54.71	1014	1.2081	12.864	-0.612	0.417	5.538	0.988
1600T200-68	0.0713	33	1.425	4.85	42.933	5.284	5.489	0.307	0.464	37.912	3.277	64.76	2030	2.4146	16.123	-0.607	0.414	5.542	0.988
1600T200-68	0.0713	50	1.425	4.85	42.933	5.284	5.489	0.307	0.464	35.022	2.806	84.00	2030	2.4146	16.123	-0.607	0.414	5.542	0.988
1600T200-97	0.1017	33	2.032	6.91	61.425	7.511	5.498	0.428	0.459	60.203	6.053	119.61	5908	7.0047	22.755	-0.598	0.408	5.550	0.988
1600T200-97	0.1017	50	2.032	6.91	61.425	7.511	5.498	0.428	0.459	57.306	5.298	158.64	5908	7.0047	22.755	-0.598	0.408	5.550	0.988
1600T200-118	0.1242	33	2.481	8.44	75.179	9.149	5.505	0.515	0.455	75.147	8.332	164.64	10783	12.7552	27.568	-0.592	0.403	5.556	0.989
1600T200-118	0.1242	50	2.481	8.44	75.179	9.149	5.505	0.515	0.455	73.619	7.433	222.55	10783	12.7552	27.568	-0.592	0.403	5.556	0.989

[1] Web-height to thickness ratio exceeds 200. Web stiffeners are required at all support points and concentrated loads.

See Section Properties Table Notes on page 5.

Web Depth-to-Thickness Ratios for Stud and Joist Members [2, 3]

Style	Web Depth (in)	18Mil 0.0188	27Mil 0.0283	30Mil 0.0312	33Mil 0.0346	43Mil 0.0451	54Mil 0.0566	68Mil 0.0713	97Mil 0.1017	118Mil 0.1242
162S	1.625	75	50	45	41	31	24	18	11	8
250S	2.500	122	81	73	66	50	39	30	20	15
350S	3.500	175	116	105	95	72	57	44	29	23
362S	3.625	182	120	109	98	75	59	46	31	24
400S	4.000	202 [1]	134	121	109	84	66	51	34	27
550S	5.500	-	187	169	153	117	92	72	49	39
600S	6.000	-	204 [1]	185	167	128	101	79	54	43
800S	8.000	-	-	249 [1]	225 [1]	172	136	107	74	59
1000S	10.000	-	-	-	-	217 [1]	172	135	93	76
1200S	12.000	-	-	-	-	-	207	163	113	92
1400S	14.000	-	-	-	-	-	242 [1]	191	133	108
1600S	16.000	-	-	-	-	-	-	219 [1]	152	124

[1] h/t exceeds 200

[2] h value used for h/t calculations is the flat width of the web. For Stud members, this is the out-to-out member size, minus twice the thickness, minus twice the inside bend radius.

[3] h/t values exceeding 260 are marked with a dash (-)

Members with h/t between 200 and 260

Member	h/t	Member	h/t
400Sxxx18	202	1000xxx43	217
600Sxxx27	204	1200Sxxx54	207
800Sxxx30	249	1400Sxxx54	242
800Sxxx33	225	1600Sxxx68	219

SFIA
STEEL FRAMING INDUSTRY ASSOCIATION

Interior Non-Structural Non-Composite Table Notes

1. Lateral loads of 5 psf, 7.5 psf, and 10 psf loads have NOT been reduced for strength or deflection checks. Full lateral load is applied.
2. Calculated properties are based upon AISI S100-12, "North American Specification for the Design of Cold-Formed Steel Structural Members."
3. Limiting heights are based upon continuous support of each flange over the full length of the stud.
4. Limiting heights are based upon steel properties only (non-composite).
5. Web crippling checks are based upon end-one flange loading condition using 1-inch end bearing.
6. Where limiting heights are followed by "e", web stiffeners are required.

Interior Nonstructural Non-Composite

			5 psf			7.5 psf			10 psf		
Stud Member	Spacing in, oc	Fy, ksi	L/120	L/240	L/360	L/120	L/240	L/360	L/120	L/240	L/360
162S125-18	12	33	9' 0"	7' 7"	6' 8"	7' 4"	6' 8"	5' 10"	6' 4"	6' 1"	5' 3"
	16		7' 10"	6' 11"	6' 1"	6' 4"	6' 1"	5' 3"	5' 6"	5' 6"	4' 10"
	24		6' 4"	6' 1"	5' 3"	5' 2"	5' 2"	4' 7"	4' 6"	4' 6"	4' 2"
162S125-27	12	33	11' 3"	8' 11"	7' 10"	9' 8"	7' 10"	6' 10"	8' 4"	7' 1"	6' 3"
	16		10' 3"	8' 2"	7' 1"	8' 4"	7' 1"	6' 3"	7' 3"	6' 5"	5' 8"
	24		8' 4"	7' 1"	6' 3"	6' 10"	6' 3"	5' 5"	5' 11"	5' 8"	4' 11"
162S125-30	12	33	11' 8"	9' 3"	8' 1"	10' 2"	8' 1"	7' 1"	8' 11"	7' 4"	6' 5"
	16		10' 7"	8' 5"	7' 4"	8' 11"	7' 4"	6' 5"	7' 9"	6' 8"	5' 10"
	24		8' 11"	7' 4"	6' 5"	7' 3"	6' 5"	5' 7"	6' 4"	5' 10"	5' 1"
162S125-33	12	33	12' 0"	9' 6"	8' 4"	10' 6"	8' 4"	7' 3"	9' 6"	7' 7"	6' 7"
	16		10' 11"	8' 8"	7' 7"	9' 6"	7' 7"	6' 7"	8' 3"	6' 11"	6' 0"
	24		9' 6"	7' 7"	6' 7"	7' 10"	6' 7"	5' 9"	6' 9"	6' 0"	5' 3"
250S125-18	12	33	11' 9"	10' 6"	9' 3"	9' 7"	9' 3"	8' 1"	8' 3"	8' 3"	7' 4"
	16		10' 2"	9' 7"	8' 4"	8' 3"	8' 3"	7' 4"	7' 2"	7' 2"	6' 8"
	24		8' 3"	8' 3"	7' 4"	6' 9"	6' 9"	6' 5"	5' 2"	5' 2"	5' 2"
250S125-27	12	33	15' 7"	12' 4"	10' 10"	12' 9"	10' 10"	9' 5"	11' 0"	9' 10"	8' 7"
	16		13' 6"	11' 3"	9' 10"	11' 0"	9' 10"	8' 7"	9' 7"	8' 11"	7' 10"
	24		11' 0"	9' 10"	8' 7"	9' 0"	8' 7"	7' 6"	7' 10"	7' 10"	6' 10"
250S125-30	12	33	16' 1"	12' 9"	11' 2"	13' 8"	11' 2"	9' 9"	11' 10"	10' 2"	8' 10"
	16		14' 5"	11' 7"	10' 2"	11' 10"	10' 2"	8' 10"	10' 3"	9' 2"	8' 1"
	24		11' 10"	10' 2"	8' 10"	9' 8"	8' 10"	7' 9"	8' 4"	8' 1"	7' 0"
250S125-33	12	33	16' 7"	13' 2"	11' 6"	14' 6"	11' 6"	10' 1"	12' 8"	10' 6"	9' 2"
	16		15' 1"	12' 0"	10' 6"	12' 8"	10' 6"	9' 2"	11' 0"	9' 6"	8' 4"
	24		12' 8"	10' 6"	9' 2"	10' 4"	9' 2"	8' 0"	9' 0"	8' 4"	7' 3"
250S125-43	12	33	18' 1"	14' 4"	12' 6"	15' 10"	12' 6"	10' 11"	14' 4"	11' 5"	9' 11"
	16		16' 5"	13' 0"	11' 5"	14' 4"	11' 5"	9' 11"	13' 0"	10' 4"	9' 1"
	24		14' 4"	11' 5"	9' 11"	12' 4"	9' 11"	8' 8"	10' 8"	9' 1"	7' 11"
250S125-54	12	33	19' 4"	15' 4"	13' 5"	16' 11"	13' 5"	11' 9"	15' 4"	12' 2"	10' 8"
	16		17' 7"	14' 0"	12' 2"	15' 4"	12' 2"	10' 8"	14' 0"	11' 1"	9' 8"
	24		15' 4"	12' 2"	10' 8"	13' 5"	10' 8"	9' 4"	12' 2"	9' 8"	8' 6"
250S125-54	12	50	19' 4"	15' 4"	13' 5"	16' 10"	13' 5"	11' 8"	15' 4"	12' 2"	10' 8"
	16		17' 7"	13' 11"	12' 2"	15' 4"	12' 2"	10' 8"	13' 11"	11' 1"	9' 8"
	24		15' 4"	12' 2"	10' 8"	13' 5"	10' 8"	9' 3"	12' 2"	9' 8"	8' 5"
250S125-68	12	33	20' 7"	16' 4"	14' 4"	18' 0"	14' 4"	12' 6"	16' 4"	13' 0"	11' 4"
	16		18' 9"	14' 10"	13' 0"	16' 4"	13' 0"	11' 4"	14' 10"	11' 10"	10' 4"
	24		16' 4"	13' 0"	11' 4"	14' 4"	11' 4"	9' 11"	13' 0"	10' 4"	9' 0"
250S125-68	12	50	20' 7"	16' 4"	14' 4"	18' 0"	14' 4"	12' 6"	16' 4"	13' 0"	11' 4"
	16		18' 9"	14' 10"	13' 0"	16' 4"	13' 0"	11' 4"	14' 10"	11' 10"	10' 4"
	24		16' 4"	13' 0"	11' 4"	14' 4"	11' 4"	9' 11"	13' 0"	10' 4"	9' 0"
350S125-18	12	33	13' 9"	13' 9"	12' 0"	11' 3"	11' 3"	10' 6"	9' 9"	9' 9"	9' 6"
	16		11' 11"	11' 11"	10' 11"	9' 9"	9' 9"	9' 6"	7' 4"	7' 4"	7' 4"
	24		9' 9"	9' 9"	9' 6"	6' 6"	6' 6"	6' 6"	4' 11"	4' 11"	4' 11"
350S125-27	12	33	18' 6"	16' 0"	14' 0"	15' 1"	14' 0"	12' 3"	13' 1"	12' 9"	11' 1"
	16		16' 0"	14' 7"	12' 9"	13' 1"	12' 9"	11' 1"	11' 4"	11' 4"	10' 1"
	24		13' 1"	12' 9"	11' 1"	10' 8"	10' 8"	9' 8"	9' 3"	9' 3"	8' 10"
350S125-30	12	33	19' 11"	16' 7"	14' 5"	16' 3"	14' 5"	12' 8"	14' 1"	13' 2"	11' 6"
	16		17' 3"	15' 0"	13' 2"	14' 1"	13' 2"	11' 6"	12' 2"	11' 11"	10' 5"
	24		14' 1"	13' 2"	11' 6"	11' 6"	11' 6"	10' 0"	9' 11"	9' 11"	9' 1"

See Interior Non-Structural Non-Composite Table Notes

Limiting Wall Heights - Non-Composite

SFIA
STEEL FRAMING INDUSTRY ASSOCIATION

Interior Nonstructural Non-Composite

			5 psf			7.5 psf			10 psf		
Stud Member	Spacing in, oc	Fy, ksi	L/120	L/240	L/360	L/120	L/240	L/360	L/120	L/240	L/360
350S125-33	12	33	21' 6"	17' 1"	14' 11"	17' 6"	14' 11"	13' 1"	15' 2"	13' 7"	11' 10"
	16		18' 7"	15' 7"	13' 7"	15' 2"	13' 7"	11' 10"	13' 2"	12' 4"	10' 9"
	24		15' 2"	13' 7"	11' 10"	12' 5"	11' 10"	10' 4"	10' 9"	10' 9"	9' 5"
350S125-43	12	33	23' 6"	18' 8"	16' 3"	20' 6"	16' 3"	14' 3"	18' 5"	14' 9"	12' 11"
	16		21' 4"	16' 11"	14' 9"	18' 5"	14' 9"	12' 11"	16' 0"	13' 5"	11' 9"
	24		18' 5"	14' 9"	12' 11"	15' 1"	12' 11"	11' 3"	13' 0"	11' 9"	10' 3"
350S125-54	12	33	25' 2"	20' 0"	17' 5"	22' 0"	17' 5"	15' 3"	20' 0"	15' 10"	13' 10"
	16		22' 10"	18' 2"	15' 10"	20' 0"	15' 10"	13' 10"	18' 0"	14' 5"	12' 7"
	24		20' 0"	15' 10"	13' 10"	17' 0"	13' 10"	12' 1"	14' 8"	12' 7"	11' 0"
350S125-54	12	50	25' 1"	19' 11"	17' 5"	21' 11"	17' 5"	15' 2"	19' 11"	15' 10"	13' 10"
	16		22' 10"	18' 1"	15' 10"	19' 11"	15' 10"	13' 10"	18' 1"	14' 4"	12' 7"
	24		19' 11"	15' 10"	13' 10"	17' 5"	13' 10"	12' 1"	15' 10"	12' 7"	11' 0"
350S125-68	12	33	26' 10"	21' 4"	18' 8"	23' 6"	18' 8"	16' 3"	21' 4"	16' 11"	14' 9"
	16		24' 5"	19' 4"	16' 11"	21' 4"	16' 11"	14' 9"	19' 4"	15' 5"	13' 5"
	24		21' 4"	16' 11"	14' 9"	18' 8"	14' 9"	12' 11"	16' 11"	13' 5"	11' 9"
350S125-68	12	50	26' 10"	21' 4"	18' 8"	23' 6"	18' 8"	16' 3"	21' 4"	16' 11"	14' 9"
	16		24' 5"	19' 4"	16' 11"	21' 4"	16' 11"	14' 9"	19' 4"	15' 5"	13' 5"
	24		21' 4"	16' 11"	14' 9"	18' 8"	14' 9"	12' 11"	16' 11"	13' 5"	11' 9"
362S125-18	12	33	14' 1"	14' 1"	12' 4"	11' 6"	11' 6"	10' 9"	9' 9"	9' 9"	9' 9"
	16		12' 2"	12' 2"	11' 3"	9' 9"	9' 9"	9' 9"	7' 4"	7' 4"	7' 4"
	24		9' 9"	9' 9"	9' 9"	6' 6"	6' 6"	6' 6"	4' 10"	4' 10"	4' 10"
362S125-27	12	33	18' 11"	16' 5"	14' 5"	15' 5"	14' 5"	12' 7"	13' 4"	13' 1"	11' 5"
	16		16' 4"	14' 11"	13' 1"	13' 4"	13' 1"	11' 5"	11' 7"	11' 7"	10' 4"
	24		13' 4"	13' 1"	11' 5"	10' 11"	10' 11"	10' 0"	9' 5"	9' 5"	9' 1"
362S125-30	12	33	20' 3"	17' 0"	14' 10"	16' 7"	14' 10"	13' 0"	14' 4"	13' 6"	11' 10"
	16		17' 7"	15' 5"	13' 6"	14' 4"	13' 6"	11' 10"	12' 5"	12' 3"	10' 9"
	24		14' 4"	13' 6"	11' 10"	11' 9"	11' 9"	10' 4"	10' 2"	10' 2"	9' 4"
362S125-33	12	33	21' 11"	17' 7"	15' 4"	17' 11"	15' 4"	13' 5"	15' 6"	13' 11"	12' 2"
	16		19' 0"	16' 0"	13' 11"	15' 6"	13' 11"	12' 2"	13' 5"	12' 8"	11' 1"
	24		15' 6"	13' 11"	12' 2"	12' 8"	12' 2"	10' 8"	10' 11"	10' 11"	9' 8"
362S125-43	12	33	24' 2"	19' 2"	16' 9"	21' 1"	16' 9"	14' 7"	18' 10"	15' 2"	13' 3"
	16		21' 11"	17' 5"	15' 2"	18' 10"	15' 2"	13' 3"	16' 4"	13' 10"	12' 1"
	24		18' 10"	15' 2"	13' 3"	15' 4"	13' 3"	11' 7"	13' 4"	12' 1"	10' 6"
362S125-54	12	33	25' 11"	20' 7"	17' 11"	22' 7"	17' 11"	15' 8"	20' 7"	16' 4"	14' 3"
	16		23' 6"	18' 8"	16' 4"	20' 7"	16' 4"	14' 3"	18' 5"	14' 10"	12' 11"
	24		20' 7"	16' 4"	14' 3"	17' 4"	14' 3"	12' 5"	15' 0"	12' 11"	11' 4"
362S125-54	12	50	25' 10"	20' 6"	17' 11"	22' 7"	17' 11"	15' 8"	20' 6"	16' 3"	14' 2"
	16		23' 5"	18' 7"	16' 3"	20' 6"	16' 3"	14' 2"	18' 7"	14' 9"	12' 11"
	24		20' 6"	16' 3"	14' 2"	17' 11"	14' 2"	12' 5"	16' 3"	12' 11"	11' 3"
362S125-68	12	33	27' 7"	21' 11"	19' 2"	24' 2"	19' 2"	16' 9"	21' 11"	17' 5"	15' 2"
	16		25' 1"	19' 11"	17' 5"	21' 11"	17' 5"	15' 2"	19' 11"	15' 10"	13' 10"
	24		21' 11"	17' 5"	15' 2"	19' 2"	15' 2"	13' 3"	16' 11"	13' 10"	12' 1"
362S125-68	12	50	27' 7"	21' 11"	19' 2"	24' 2"	19' 2"	16' 9"	21' 11"	17' 5"	15' 2"
	16		25' 1"	19' 11"	17' 5"	21' 11"	17' 5"	15' 2"	19' 11"	15' 10"	13' 10"
	24		21' 11"	17' 5"	15' 2"	19' 2"	15' 2"	13' 3"	17' 5"	13' 10"	12' 1"
400S125-18	12	33	14' 9"	14' 9"	13' 4"	12' 1"	12' 1"	11' 8"	9' 6"	9' 6"	9' 6"
	16		12' 10"	12' 10"	12' 2"	9' 6"	9' 6"	9' 6"	7' 2"	7' 2"	7' 2"
	24		9' 6"	9' 6"	9' 6"	6' 4"	6' 4"	6' 4"	4' 9"	4' 9"	4' 9"
400S125-27	12	33	19' 11"	17' 9"	15' 6"	16' 3"	15' 6"	13' 7"	14' 1"	14' 1"	12' 4"
	16		17' 3"	16' 2"	14' 1"	14' 1"	14' 1"	12' 4"	12' 2"	12' 2"	11' 2"
	24		14' 1"	14' 1"	12' 4"	11' 6"	11' 6"	10' 9"	10' 0"	10' 0"	9' 9"
400S125-30	12	33	21' 5"	18' 5"	16' 1"	17' 6"	16' 1"	14' 0"	15' 2"	14' 7"	12' 9"
	16		18' 7"	16' 8"	14' 7"	15' 2"	14' 7"	12' 9"	13' 1"	13' 1"	11' 7"
	24		15' 2"	14' 7"	12' 9"	12' 4"	12' 4"	11' 2"	10' 9"	10' 9"	10' 1"
400S125-33	12	33	23' 2"	19' 0"	16' 7"	18' 11"	16' 7"	14' 6"	16' 4"	15' 1"	13' 2"
	16		20' 0"	17' 3"	15' 1"	16' 4"	15' 1"	13' 2"	14' 2"	13' 8"	12' 0"
	24		16' 4"	15' 1"	13' 2"	13' 4"	13' 2"	11' 6"	11' 7"	11' 7"	10' 5"
400S125-43	12	33	26' 1"	20' 8"	18' 1"	22' 9"	18' 1"	15' 10"	19' 11"	16' 5"	14' 4"
	16		23' 8"	18' 10"	16' 5"	19' 11"	16' 5"	14' 4"	17' 3"	14' 11"	13' 0"
	24		19' 11"	16' 5"	14' 4"	16' 3"	14' 4"	12' 6"	14' 1"	13' 0"	11' 5"

See Interior Nonstructural Non-Composite Table Notes

Limiting Wall Heights - Non-Composite

SFIA
STEEL FRAMING INDUSTRY ASSOCIATION

Interior Nonstructural Non-Composite

			5 psf			7.5 psf			10 psf		
Stud Member	Spacing in, oc	Fy, ksi	L/120	L/240	L/360	L/120	L/240	L/360	L/120	L/240	L/360
400S125-54	12	33	28' 0"	22' 3"	19' 5"	24' 5"	19' 5"	16' 11"	22' 3"	17' 8"	15' 5"
	16		25' 5"	20' 2"	17' 8"	22' 3"	17' 8"	15' 5"	19' 7"	16' 0"	14' 0"
	24		22' 3"	17' 8"	15' 5"	18' 5"	15' 5"	13' 5"	16' 0"	14' 0"	12' 3"
400S125-54	12	50	27' 11"	22' 2"	19' 4"	24' 4"	19' 4"	16' 11"	22' 2"	17' 7"	15' 4"
	16		25' 4"	20' 1"	17' 7"	22' 2"	17' 7"	15' 4"	20' 1"	16' 0"	13' 11"
	24		22' 2"	17' 7"	15' 4"	19' 4"	15' 4"	13' 5"	17' 7"	13' 11"	12' 2"
400S125-68	12	33	29' 11"	23' 9"	20' 9"	26' 1"	20' 9"	18' 1"	23' 9"	18' 10"	16' 5"
	16		27' 2"	21' 7"	18' 10"	23' 9"	18' 10"	16' 5"	21' 7"	17' 1"	14' 11"
	24		23' 9"	18' 10"	16' 5"	20' 9"	16' 5"	14' 4"	18' 0"	14' 11"	13' 1"
400S125-68	12	50	29' 11"	23' 9"	20' 9"	26' 1"	20' 9"	18' 1"	23' 9"	18' 10"	16' 5"
	16		27' 2"	21' 7"	18' 10"	23' 9"	18' 10"	16' 5"	21' 7"	17' 1"	14' 11"
	24		23' 9"	18' 10"	16' 5"	20' 9"	16' 5"	14' 4"	18' 10"	14' 11"	13' 1"
550S125-18	12	33	17' 6"	17' 6"	16' 9"	11' 10"	11' 10"	11' 10"	8' 10"	8' 10"	8' 10"
	16		13' 3"	13' 3"	13' 3"	8' 10"	8' 10"	8' 10"	6' 8"	6' 8"	6' 8"
	24		8' 10"	8' 10"	8' 10"	5' 11"	5' 11"	5' 11"	4' 5"	4' 5"	4' 5"
550S125-27	12	33	23' 10"	22' 9"	19' 10"	19' 6"	19' 6"	17' 4"	16' 11"	16' 11"	15' 9"
	16		20' 8"	20' 8"	18' 1"	16' 11"	16' 11"	15' 9"	14' 7"	14' 7"	14' 4"
	24		16' 11"	16' 11"	15' 9"	13' 9"	13' 9"	13' 9"	10' 4"	10' 4"	10' 4"
550S125-30	12	33	25' 8"	23' 7"	20' 7"	21' 0"	20' 7"	18' 0"	18' 2"	18' 2"	16' 4"
	16		22' 3"	21' 5"	18' 8"	18' 2"	18' 2"	16' 4"	15' 9"	15' 9"	14' 10"
	24		18' 2"	18' 2"	16' 4"	14' 10"	14' 10"	14' 3"	12' 7"	12' 7"	12' 7"
550S125-33	12	33	27' 9"	24' 5"	21' 4"	22' 8"	21' 4"	18' 8"	19' 8"	19' 5"	16' 11"
	16		24' 1"	22' 2"	19' 5"	19' 8"	19' 5"	16' 11"	17' 0"	17' 0"	15' 5"
	24		19' 8"	19' 5"	16' 11"	16' 1"	16' 1"	14' 10"	13' 11"	13' 11"	13' 5"
550S125-43	12	33	33' 8"	26' 9"	23' 4"	27' 8"	23' 4"	20' 5"	24' 0"	21' 3"	18' 6"
	16		29' 4"	24' 4"	21' 3"	24' 0"	21' 3"	18' 6"	20' 9"	19' 3"	16' 10"
	24		24' 0"	21' 3"	18' 6"	19' 7"	18' 6"	16' 2"	16' 11"	16' 10"	14' 9"
550S125-54	12	33	36' 2"	28' 9"	25' 1"	31' 7"	25' 1"	21' 11"	28' 3"	22' 9"	19' 11"
	16		32' 10"	26' 1"	22' 9"	28' 3"	22' 9"	19' 11"	24' 5"	20' 8"	18' 1"
	24		28' 3"	22' 9"	19' 11"	23' 0"	19' 11"	17' 5"	19' 11"	18' 1"	15' 10"
550S125-54	12	50	36' 1"	28' 8"	25' 0"	31' 6"	25' 0"	21' 10"	28' 8"	22' 9"	19' 10"
	16		32' 9"	26' 0"	22' 9"	28' 8"	22' 9"	19' 10"	26' 0"	20' 8"	18' 0"
	24		28' 8"	22' 9"	19' 10"	25' 0"	19' 10"	17' 4"	22' 9"	18' 0"	15' 9"
550S125-68	12	33	38' 8"	30' 9"	26' 10"	33' 10"	26' 10"	23' 5"	30' 9"	24' 5"	21' 4"
	16		35' 2"	27' 11"	24' 5"	30' 9"	24' 5"	21' 4"	27' 11"	22' 2"	19' 4"
	24		30' 9"	24' 5"	21' 4"	26' 10"	21' 4"	18' 7"	24' 5"	19' 4"	16' 11"
550S125-68	12	50	38' 8"	30' 9"	26' 10"	33' 10"	26' 10"	23' 5"	30' 9"	24' 5"	21' 4"
	16		35' 2"	27' 11"	24' 5"	30' 9"	24' 5"	21' 4"	27' 11"	22' 2"	19' 4"
	24		30' 9"	24' 5"	21' 4"	26' 10"	21' 4"	18' 7"	24' 5"	19' 4"	16' 11"
600S125-18	12	33	17' 4"	17' 4"	17' 4"	11' 6"	11' 6"	11' 6"	8' 8"	8' 8"	8' 8"
	16		13' 0"	13' 0"	13' 0"	8' 8"	8' 8"	8' 8"	6' 6"	6' 6"	6' 6"
	24		8' 8"	8' 8"	8' 8"	5' 9"	5' 9"	5' 9"	4' 4"	4' 4"	4' 4"
600S125-27	12	33	24' 11"	24' 4"	21' 3"	20' 4"	20' 4"	18' 7"	17' 7"	17' 7"	16' 10"
	16		21' 7"	21' 7"	19' 4"	17' 7"	17' 7"	16' 10"	15' 3"	15' 3"	15' 3"
	24		17' 7"	17' 7"	16' 10"	13' 7"	13' 7"	13' 7"	10' 2"	10' 2"	10' 2"
600S125-30	12	33	26' 10"	25' 2"	22' 0"	21' 11"	21' 11"	19' 3"	19' 0"	19' 0"	17' 6"
	16		23' 3"	22' 11"	20' 0"	19' 0"	19' 0"	17' 6"	16' 5"	16' 5"	15' 10"
	24		19' 0"	19' 0"	17' 6"	15' 6"	15' 6"	15' 3"	12' 5"	12' 5"	12' 5"
600S125-33	12	33	29' 0"	26' 2"	22' 10"	23' 9"	22' 10"	19' 11"	20' 6"	20' 6"	18' 1"
	16		25' 2"	23' 9"	20' 9"	20' 6"	20' 6"	18' 1"	17' 9"	17' 9"	16' 6"
	24		20' 6"	20' 6"	18' 1"	16' 9"	16' 9"	15' 10"	14' 6"	14' 6"	14' 5"
600S125-43	12	33	35' 6"	28' 9"	25' 1"	29' 0"	25' 1"	21' 11"	25' 2"	22' 10"	19' 11"
	16		30' 9"	26' 1"	22' 10"	25' 2"	22' 10"	19' 11"	21' 9"	20' 9"	18' 1"
	24		25' 2"	22' 10"	19' 11"	20' 6"	19' 11"	17' 5"	17' 9"	17' 9"	15' 10"

See Interior Nonstructural Non-Composite Table Notes

Limiting Wall Heights - Non-Composite

SFIA
STEEL FRAMING INDUSTRY ASSOCIATION

Interior Nonstructural Non-Composite

			5 psf			7.5 psf			10 psf		
Stud Member	Spacing in, oc	Fy, ksi	L/120	L/240	L/360	L/120	L/240	L/360	L/120	L/240	L/360
600S125-54	12	33	38' 10"	30' 10"	26' 11"	33' 11"	26' 11"	23' 6"	29' 8"	24' 6"	21' 5"
	16		35' 4"	28' 0"	24' 6"	29' 8"	24' 6"	21' 5"	25' 8"	22' 3"	19' 5"
	24		29' 8"	24' 6"	21' 5"	24' 3"	21' 5"	18' 8"	21' 0"	19' 5"	17' 0"
600S125-54	12	50	38' 9"	30' 9"	26' 10"	33' 10"	26' 10"	23' 6"	30' 9"	24' 5"	21' 4"
	16		35' 3"	27' 11"	24' 5"	30' 9"	24' 5"	21' 4"	27' 11"	22' 2"	19' 5"
	24		30' 9"	24' 5"	21' 4"	26' 10"	21' 4"	18' 8"	24' 1"	19' 5"	16' 11"
600S125-68	12	33	41' 7"	33' 0"	28' 10"	36' 4"	28' 10"	25' 2"	33' 0"	26' 2"	22' 11"
	16		37' 9"	30' 0"	26' 2"	33' 0"	26' 2"	22' 11"	30' 0"	23' 10"	20' 9"
	24		33' 0"	26' 2"	22' 11"	28' 10"	22' 11"	20' 0"	26' 2"	20' 9"	18' 2"
600S125-68	12	50	41' 7"	33' 0"	28' 10"	36' 4"	28' 10"	25' 2"	33' 0"	26' 2"	22' 11"
	16		37' 9"	30' 0"	26' 2"	33' 0"	26' 2"	22' 11"	30' 0"	23' 10"	20' 9"
	24		33' 0"	26' 2"	22' 11"	28' 10"	22' 11"	20' 0"	26' 2"	20' 9"	18' 2"
800S125-33	12	33	33' 1"	32' 8"	28' 6"	27' 0"	27' 0"	24' 11"	23' 5"	23' 5"	22' 8"
	16		28' 8"	28' 8"	25' 11"	23' 5"	23' 5"	22' 8"	20' 3"	20' 3"	20' 3"
	24		23' 5"	23' 5"	22' 8"	19' 1"	19' 1"	19' 1"	14' 5"	14' 5"	14' 5"
800S125-43	12	33	40' 11"	36' 1"	31' 6"	33' 5"	31' 6"	27' 6"	28' 11"	28' 8"	25' 0"
	16		35' 6"	32' 9"	28' 8"	28' 11"	28' 8"	25' 0"	25' 1"	25' 1"	22' 9"
	24		28' 11"	28' 8"	25' 0"	23' 8"	23' 8"	21' 10"	20' 6"	20' 6"	19' 10"
800S125-54	12	33	48' 10"	39' 1"	34' 2"	39' 11"	34' 2"	29' 10"	34' 6"	31' 1"	27' 2"
	16		42' 4"	35' 7"	31' 1"	34' 6"	31' 1"	27' 2"	29' 11"	28' 3"	24' 8"
	24		34' 6"	31' 1"	27' 2"	28' 2"	27' 2"	23' 8"	24' 5"	24' 5"	21' 6"
800S125-54	12	50	48' 10"	38' 9"	33' 10"	42' 8"	33' 10"	29' 7"	38' 9"	30' 9"	26' 10"
	16		44' 4"	35' 2"	30' 9"	38' 9"	30' 9"	26' 10"	34' 1"	27' 11"	24' 5"
	24		38' 9"	30' 9"	26' 10"	32' 1"	26' 10"	23' 6"	27' 10"	24' 5"	21' 4"
800S125-68	12	33	52' 11"	42' 0"	36' 8"	46' 3"	36' 8"	32' 1"	41' 0"	33' 4"	29' 2"
	16		48' 1"	38' 2"	33' 4"	41' 0"	33' 4"	29' 2"	35' 6"	30' 4"	26' 6"
	24		41' 0"	33' 4"	29' 2"	33' 6"	29' 2"	25' 5"	29' 0"	26' 6"	23' 1"
800S125-68	12	50	52' 11"	42' 0"	36' 8"	46' 2"	36' 8"	32' 0"	42' 0"	33' 4"	29' 1"
	16		48' 1"	38' 2"	33' 4"	42' 0"	33' 4"	29' 1"	38' 2"	30' 3"	26' 5"
	24		42' 0"	33' 4"	29' 1"	36' 8"	29' 1"	25' 5"	33' 4"	26' 5"	23' 1"

See Interior Nonstructural Non-Composite Table Notes

Interior Nonstructural Composite Table Notes

1. Allowable composite heights are derived from tests conducted in accordance with ICC-ES AC86-2012.
2. Table heights also applicable for two layers of gypsum board.
3. The gypsum board (one or two layers) must be installed vertically full height to each stud flange using minimum No. 6 Type S Drywall screws spaced a maximum of 12 in. on-center for studs at 24-in spacing, and 16 in. on-center for studs at 16 and 12 in. spacing.
4. Application of gypsum board as required in accordance with Specification C840.
5. No fasteners are required for attaching the stud to the track, except as required by subsection 5.3.2.1.
6. Stud end bearing must be a minimum of 1 inch.
7. Minimum material yield strength equals 33 ksi.
8. 'f' adjacent to the height value indicates that flexural stress controls the allowable wall height.

Interior Nonstructural Composite

			5 psf			7.5 psf			10 psf			15 psf		
Stud Member	Spacing (in, o.c.)	Fy, ksi	L/120	L/240	L/360	L/120	L/240	L/360	L/120	L/240	L/360	L/120	L/240	L/360
162S125-18	12	33	13' 0" f	11' 1"	9' 10"	10' 8" f	9' 8"	8' 7"	9' 3'' f	8' 9''	7' 9''			
	16		11' 3" f	10' 1"	8' 11"	9' 3" f	8' 9"	7' 9"	8' 0'' f	7' 11''				
	24		9' 3" f	8' 9"	7' 9"									
162S125-27	12	33	14' 9"	11' 8"	10' 2"	12' 10"	10' 2"	8' 7"	11' 8''	9' 1''	7' 6''	8' 6" f		
	16		13' 4"	10' 7"	9' 1"	11' 8"	9' 1"	7' 6"	10' 7''	7' 11''				
	24		11' 8"	9' 1"		10' 2"			9' 1''					
162S125-30	12	33	14' 11"	11' 10"	10' 4"	13' 1"	10' 4"	8' 11"	11' 10''	9' 4''	7' 11''	9' 10" f	7' 11''	
	16		13' 7"	10' 9"	9' 4"	11' 10"	9' 4"	7' 11"	10' 9''	8' 3''		8' 6" f		
	24		11' 10"	9' 4"	7' 11"	10' 4"	7' 11"		9' 4''					
250S125-18	12	33	16' 4" f	14' 2"	12' 9"	13' 4" f	12' 4"	11' 2"	11' 7'' f	11' 3''	10' 2''			
	16		14' 2" f	12' 10"	11' 7'	11' 7" f	11' 3"	10' 2"	10' 0'' f	10' 0'' f	9' 0''			
	24		11' 7" f	11' 3"	10'2"	9' 5" f	9' 5" f	8' 6"	8' 2'' f	8' 2'' f				
250S125-27	12	33	18' 7"	15' 4"	13' 9"	16' 3"	13' 5"	11' 12"	14' 9''	12' 2''	10' 11''	10' 6" f	10' 6" f	9' 4"
	16		16' 10"	13' 11"	12' 5"	14' 9"	12' 2"	10' 11"	13' 5''	11' 1''	9' 11''	9' 1" f	9' 1" f	8' 1"
	24		14' 9"	12' 2"	10' 11"	12'11"	10' 8"	9' 4"	11' 3'' f	9' 8''	8' 1''			
250S125-30	12	33	18' 5"	15' 10"	14' 1"	16' 1"	13' 10"	12' 4"	14' 7''	12' 7''	11' 2''	11' 0" f	11' 0" f	9' 9"
	16		16' 9"	14' 5"	12' 10"	14' 7"	12' 7"	11' 2"	13' 3''	11' 5''	10' 2''	9' 6" f	9' 6" f	8' 8"
	24		14' 7"	12' 7"	11' 2"	12' 9"	11' 0"	9' 9"	11' 7''	10' 0''	8' 8''	7' 9" f	7' 9" f	
250S125-33	12	33	19' 8"	15' 8"	13' 8"	17' 3"	13' 8"	11' 11"	15' 8''	12' 5''	10' 10''	11' 5" f	10' 10"	9' 5'
	16		17' 11"	14' 3"	12' 5"	15' 8"	12' 5"	10' 10"	14' 3''	11' 3''	9' 10''	9' 11" f	9' 10"	8' 4"
	24		15' 8"	12' 5"	10' 10"	13' 8"	10' 10"	9' 5"	12' 4'' f	9' 10''	8' 4''	8' 1" f	8' 1" f	
350S125-18	12	33	18' 3" f	16' 4"	14' 4"	14' 11" f	14' 4"	12' 6"	12'11''	12'11'' f	11'4''	8' 5" f	8' 5" f	8' 5" f
	16		15' 10" f	14' 10"	13' 0"	12' 11" f	12' 11" f	11' 4"	11'2''	11'2'' f	10'3''			
	24		12' 11" f	12' 11" f	11' 4"	10' 7" f	10' 7" f	9'11"	9'2''	9'2'' f	9'10''			
350S125-27	12	33	22' 6"	17' 11"	15' 7"	19' 8"	15' 7"	13' 8"	17' 11''	14' 2''	12' 4''	12' 0" f	12' 0" f	10' 8"
	16		20' 6"	16' 3"	14' 2"	17' 11"	14' 2"	12' 4"	15' 10'' f	12' 11''	11' 2''	10' 5" f	10' 5" f	
	24		17' 11"	14' 2"	12' 4"	14'11" f	12' 4''	10' 8"	12' 11'' f	11' 2''				
350S125-30	12	33	22' 6"	17'11"	15' 8"	19' 8"	15' 8"	13' 8"	17' 11''	14' 2''	12' 4''	12' 10" f	12' 4"	10' 7"
	16		20' 6"	16' 3"	14' 2"	17' 11"	14' 2"	12' 4"	16' 3''	12' 11''	11' 1''	11' 1" f	11' 1"	
	24		17' 11"	14' 2"	12' 4"	15' 8"	12' 4"	10' 7"	13' 9'' f	11' 1''				
350S125-33	12	33	23' 0"	18' 3"	15' 1"	20' 1"	15' 11"	13' 11"	18' 3''	14' 6''	12' 8''	13' 3" f	12' 8"	10' 10"
	16		20' 11"	16' 7"	14' 6"	18' 3"	14' 6"	12' 8"	16' 7''	13' 2''	11' 4''	11' 6" f	11' 4"	9' 8"
	24		18' 3"	14' 6"	12' 8"	15' 11"	12' 8"	10' 10"	14' 4'' f	11' 4''	9' 8''			
362S125-18	12	33	18' 8" f	16' 8"	14' 7"	15' 3" f	14' 7"	12' 9"	13' 2'' f	13' 2'' f	11' 6''	8' 8" f	8' 8" f	8' 8" f
	16		16' 2" f	15' 2"	13' 3"	13' 2" f	13' 2" f	11' 6"	11' 5'' f	11' 5'' f	10' 4''			
	24		13' 2" f	13' 2" f	11' 6"	10' 9" f	10' 9" f	9' 11"	9' 4'' f	9' 4'' f	8' 11''			
362S125-27	12	33	22' 10"	18' 2"	15' 10"	19' 11"	15' 10"	13' 10"	18' 2''	14' 5''	12' 6''	12' 0" f	12' 0" f	10' 7"
	16		20' 9"	16' 6"	14' 5"	18' 2"	14' 5"	12' 6"	15' 9'' f	13' 1''	11' 1''	10' 5" f	10' 5" f	
	24		18' 2"	14' 5"	12' 6"	14' 11" f	12' 6"	10' 7"	12' 11'' f	11' 11''				
362S125-30	12	33	22' 10"	18' 3"	16' 4"	19' 11"	16' 0"	14' 3"	18' 1''	14' 6''	12' 11''	12' 8" f	12' 8" f	10' 11"
	16		20' 8"	16' 7"	14' 10"	18' 1"	14' 6"	12' 11"	16' 5''	13' 2''	11' 6''	11' 0" f	11' 0" f	
	24		18' 1"	14' 6"	12' 11"	15' 9" f	12' 8"	10' 11"	13' 8'' f	11' 4''				
362S125-33	12	33	24' 2"	19' 2"	16' 9"	21' 1"	16' 9"	14' 8"	19' 2''	15' 3''	13' 4''	13' 5" f	13' 4"	11' 4"
	16		21' 11"	17' 5"	15' 3"	19' 2"	15' 3"	13' 4"	17' 5''	13' 10''	11' 11''	11' 8" f	11' 8" f	10' 1''
	24		19' 2"	15' 3"	13' 4"	16' 8" f	13' 4"	11' 4"	14' 5'' f	11' 11''	10' 1''			

See Interior Nonstructural Composite Table Notes

Limiting Wall Heights - Composite

SFIA
STEEL FRAMING INDUSTRY ASSOCIATION

Interior Nonstructural Composite

Stud Member	Spacing (in, o.c.)	Fy, ksi	5 psf			7.5 psf			10 psf			15 psf		
			L/120	L/240	L/360	L/120	L/240	L/360	L/120	L/240	L/360	L/120	L/240	L/360
400S125-18	12	33	19' 3" f	17' 6"	15' 4"	15' 9" f	15' 4"	13' 4"	13' 8'' f	13' 8'' f	12' 2''	8' 11" f	8' 11" f	8' 11" f
	16		16' 8" f	15' 11"	13' 11"	13' 8" f	13' 8" f	12' 2"	11' 10'' f	11' 10'' f	11' 0''	7' 9" f	7' 9" f	7' 9" f
	24		13' 8" f	13' 8" f	12' 2"	11' 2" f	11' 2" f	10' 7"	9' 8'' f	9' 8'' f	9' 7''			
400S125-27	12	33	24' 6"	19' 5"	17' 0"	21' 5"	17' 0"	14' 10"	18' 8'' f	15' 5''	13' 6''	12' 3" f	12' 3" f	11' 8"
	16		22' 3"	17' 8"	15' 5"	18' 8" f	15' 5"	13' 6"	16' 2'' f	14' 0''	12' 2''	10' 8" f	10' 8" f	10' 6"
	24		18' 8" f	15' 5"	13' 6"	15' 3" f	13' 6"	11' 8"	13' 3'' f	12' 2''	10' 6''			
400S125-30	12	33	24' 6"	19' 5"	17' 0"	21' 5"	17' 0"	14' 10"	19' 5''	15' 5''	13' 6''	13' 2" f	13' 2" f	11' 7"
	16		22' 3"	17' 8"	15' 5"	19' 5"	15' 5"	13' 6"	17' 5'' f	14' 0''	12' 2''	11' 5" f	11' 5" f	10' 4"
	24		19' 5"	15' 5"	13' 6"	16' 5" f	13' 6"	11' 7"	14' 2'' f	12' 2''	10' 4''			
400S125-33	12	33	25' 3"	20' 1"	17' 6"	22' 1"	17' 6"	15' 4"	20' 1''	15' 11''	13' 11''	13' 11" f	13' 11"	12' 0"
	16		22' 11"	18' 3"	15' 11"	20' 1"	15' 11"	13' 11"	18' 3''	14' 5''	12' 7''	12' 1" f	12' 1" f	10' 9"
	24		20' 1"	15' 11"	13' 11"	17' 3" f	13' 11"	12' 0"	15' 0'' f	12' 7''	10' 9''	9' 10" f	9'10" f	
550S125-18	12	33	21' 11" f	21' 11" f	19' 6"	17' 10" f	17' 10"	17' 0"	15' 6" f	15' 6" f	15' 6" f			
	16		19' 0" f	19' 0" f	17' 9"	15' 6" f	15' 6" f	15' 6" f	13' 5" f	13' 5" f	13' 5" f			
	24		15' 6" f	15' 6" f	15' 6" f	12' 8" f	12' 8" f	12' 8" f						
550S125-27	12	33	30' 4"	24' 8"	21' 10"	26' 9" f	21' 10"	19' 4"	23' 2'' f	20' 0''	17' 8''			
	16		27' 11"	22' 8"	20' 0"	23' 2" f	20' 0"	17' 8"	20' 1'' f	18' 4''	16' 0''			
	24		23' 2" f	20' 0"	17' 8"	18' 11" f	17' 8"	15' 5"	16' 5'' f	16' 0''				
550S125-30	12	33	30' 5"	24' 10"	22' 0"	27' 0"	22' 6"	19' 5"	24' 10''	20' 2''	17' 10''	16' 4" f	16' 4" f	15' 7"
	16		28' 0"	22' 9"	20' 2"	24' 10" f	20' 2"	17' 10"	21' 7'' f	18' 6''	16' 2''			
	24		24' 10"	20' 2"	17' 10"	20' 4" f	17' 10"	15' 7"	17' 7'' f	16' 2''				
600S125-18	12	33	23' 2" f	22' 9"	19' 11"	18' 11" f	18' 11" f	17' 5"	16' 4" f	16' 4" f	15' 10"			
	16		20' 1" f	20' 1" f	18' 1"	16' 4" f	16' 4" f	15' 10"	14' 2" f	14' 2" f	14' 2" f			
	24		16' 4" f	16' 4" f	15' 10"	13' 4" f	13' 4" f	13' 4" f						
600S125-27	12	33	32' 5" f	26' 9"	23' 5"	26' 5" f	23' 5"	20' 5"	22' 11'' f	21' 3''	18' 7''			
	16		28' 1" f	24' 4"	21' 3"	22' 11" f	21' 3"	18' 7"	19' 10'' f	19' 4''	16' 10''			
	24		22' 11" f	21' 3"	18' 7"	18' 8" f	18' 7"	16' 1"	16' 2'' f	16' 2'' f				
600S125-30	12	33	34' 2"	27' 1"	23' 8"	28' 11" f	23' 8"	20' 8"	25' 0'' f	21' 6''	18' 9''	16' 5" f	16' 5" f	16' 5" f
	16		30' 8" f	24' 7"	21' 6"	25' 0" f	21' 6"	18' 9"	21' 8'' f	19' 6''	17' 1''			
	24		25' 0" f	21' 6"	18' 9"	20' 5" f	18' 9"	16' 5"	17' 8'' f	17' 1''				
600S125-33	12	33	35' 4"	28' 1"	24' 6"	30' 10"	24' 6"	21' 5"	27' 10'' f	22' 3''	19' 5''	18' 4" f	18' 4" f	16' 11"
	16		32' 1" f	25' 6"	22' 3"	27' 10" f	22' 3"	19' 5"	24' 1'' f	20' 3''	17' 8''	15' 10" f	15' 10" f	
	24		27' 10" f	22' 3"	19' 5"	22' 9" f	19' 5"	16' 11"	19' 8'' f	17' 8''				

See Interior Nonstructural Composite Table Notes

Wall Height Table Notes

1. Lateral loads have not been modified for strength checks: full loads are applied.
2. Calculated properties are based on AISI S100-12, "North American Specification for Cold-Formed Steel Structural Members."
3. For 15 psf or higher wind pressure, read the note below.

   IBC 2012/ASCE 7-10: Due to the change in the model building codes, design wind pressures determined using IBC 2012/ASCE 7-10 are strength level loads (LRFD) in comparison to those determined in earlier IBC codes which were service level loads (ASD). The load/span tables that follow are based on service level (ASD) wind loads. Therefore, to properly use the load/span tables in this catalog, multiply the IBC 2012/ASCE 7-10 design wind pressures by 0.6 (Reference section 2.4 ASCE 7-10) prior to entering the load/span tables.

   - Example:
     * ASCE 7-10 Calculated Design Wind Pressure = 25 psf (Strength level loads, LRFD)
     * Convert to service level loads (ASD) = 25 psf x 0.6 = 15 psf
     * Use 15 psf as the Pressure Value used in this Table to determine the member span

   Any Other Building Code: The load/span tables that follow are based on service level (ASD) wind loads. If the wind load being used meets this criterion, it does not need to be modified prior to using the tables.

3. 15 psf and higher wind pressures have been multiplied by 0.7 for deflection determination, in accordance with footnote "f" of IBC Table 1604.3.
4. Limiting heights are based on continuous support of each flange over the full length of the stud.
5. Limiting heights are based on steel properties alone (non-composite).
6. Web crippling checks are based on end-one flange loading condition using 1-inch end bearing.
7. End shear and web crippling capacity have not been reduced for punchouts. Punchouts are assumed to be at least 10-inches from the end of members, in accordance with ASTM C955, Section 4.6.
8. Where limiting heights are followed by "e", web stiffeners are required.

Limiting Wall Heights - Curtain Wall

Stud Member	Spacing, in, oc	Fy, ksi	15 psf			20 psf			25 psf			30 psf			35 psf			40 psf		
			L/240	L/360	L/600	L/240	L/360	L/600	L/240	L/360	L/600	L/240	L/360	L/600	L/240	L/360	L/600	L/240	L/360	L/600
250S137-33	12	33	10' 10"	9' 5"	8' 0"	9' 10"	8' 7"	7' 3"	9' 1"	8' 0"	6' 9"	8' 4"	7' 6"	6' 4"	7' 8"	7' 2"	6' 0"	7' 2"	6' 10"	5' 9"
250S137-33	16	33	9' 10"	8' 7"	7' 3"	8' 10"	7' 10"	6' 7"	7' 10"	7' 3"	6' 1"	7' 2"	6' 10"	5' 9"	6' 8"	6' 6"	5' 6"	6' 3"	6' 2"	5' 3"
250S137-33	24	33	8' 4"	7' 6"	6' 4"	7' 2"	6' 10"	5' 9"	6' 5"	6' 4"	5' 4"	5' 10" e	5' 10" e	5' 0"	5' 5" e	5' 5" e	4' 9"	5' 1" e	5' 1" e	4' 7" e
250S137-43	12	33	11' 9"	10' 3"	8' 8"	10' 8"	9' 4"	7' 10"	9' 11"	8' 8"	7' 4"	9' 4"	8' 2"	6' 11"	8' 10"	7' 9"	6' 6"	8' 6"	7' 5"	6' 3"
250S137-43	16	33	10' 8"	9' 4"	7' 10"	9' 9"	8' 6"	7' 2"	9' 0"	7' 10"	6' 8"	8' 6"	7' 5"	6' 3"	8' 1"	7' 0"	5' 11"	7' 6"	6' 9"	5' 8"
250S137-43	24	33	9' 4"	8' 2"	6' 11"	8' 6"	7' 5"	6' 3"	7' 9"	6' 11"	5' 10"	7' 1"	6' 6"	5' 6"	6' 7"	6' 2"	5' 2"	6' 2"	5' 11"	5' 0"
250S137-54	12	33	12' 7"	11' 0"	9' 3"	11' 5"	10' 0"	8' 5"	10' 7"	9' 3"	7' 10"	10' 0"	8' 9"	7' 4"	9' 6"	8' 3"	7' 0"	9' 1"	7' 11"	6' 8"
250S137-54	16	33	11' 5"	10' 0"	8' 5"	10' 5"	9' 1"	7' 8"	9' 8"	8' 5"	7' 1"	9' 1"	7' 11"	6' 8"	8' 7"	7' 6"	6' 4"	8' 3"	7' 2"	6' 1"
250S137-54	24	33	10' 0"	8' 9"	7' 4"	9' 1"	7' 11"	6' 8"	8' 5"	7' 4"	6' 2"	7' 11"	6' 11"	5' 10"	7' 5"	6' 7"	5' 7"	6' 11"	6' 3"	5' 4"
250S137-54	12	50	12' 7"	11' 0"	9' 3"	11' 5"	10' 0"	8' 5"	10' 7"	9' 3"	7' 10"	10' 0"	8' 9"	7' 4"	9' 6"	8' 3"	7' 0"	9' 1"	7' 11"	6' 8"
250S137-54	16	50	11' 5"	10' 0"	8' 5"	10' 5"	9' 1"	7' 8"	9' 8"	8' 5"	7' 1"	9' 1"	7' 11"	6' 8"	8' 7"	7' 6"	6' 4"	8' 3"	7' 2"	6' 1"
250S137-54	24	50	10' 0"	8' 9"	7' 4"	9' 1"	7' 11"	6' 8"	8' 5"	7' 4"	6' 2"	7' 11"	6' 11"	5' 10"	7' 6"	6' 7"	5' 7"	7' 2"	6' 3"	5' 4"
250S137-68	12	33	13' 5"	11' 9"	9' 11"	12' 2"	10' 8"	9' 0"	11' 4"	9' 11"	8' 4"	10' 8"	9' 4"	7' 10"	10' 1"	8' 10"	7' 5"	9' 8"	8' 5"	7' 1"
250S137-68	16	33	12' 2"	10' 8"	9' 0"	11' 1"	9' 8"	8' 2"	10' 3"	9' 0"	7' 7"	9' 8"	8' 5"	7' 1"	9' 2"	8' 0"	6' 9"	8' 9"	7' 8"	6' 6"
250S137-68	24	33	10' 8"	9' 4"	7' 10"	9' 8"	8' 5"	7' 1"	9' 0"	7' 10"	6' 7"	8' 5"	7' 5"	6' 3"	8' 0"	7' 0"	5' 11"	7' 8"	6' 8"	5' 8"
250S137-68	12	50	13' 5"	11' 9"	9' 11"	12' 2"	10' 8"	9' 0"	11' 4"	9' 11"	8' 4"	10' 8"	9' 4"	7' 10"	10' 1"	8' 10"	7' 5"	9' 8"	8' 5"	7' 1"
250S137-68	16	50	12' 2"	10' 8"	9' 0"	11' 1"	9' 8"	8' 2"	10' 3"	9' 0"	7' 7"	9' 8"	8' 5"	7' 1"	9' 2"	8' 0"	6' 9"	8' 9"	7' 8"	6' 6"
250S137-68	24	50	10' 8"	9' 4"	7' 10"	9' 8"	8' 5"	7' 1"	9' 0"	7' 10"	6' 7"	8' 5"	7' 5"	6' 3"	8' 0"	7' 0"	5' 11"	7' 8"	6' 8"	5' 8"
250S162-33	12	33	11' 4"	9' 11"	8' 5"	10' 4"	9' 0"	7' 7"	9' 7"	8' 5"	7' 1"	8' 11"	7' 11"	6' 8"	8' 3"	7' 6"	6' 4"	7' 8"	7' 2"	6' 0"
250S162-33	16	33	10' 4"	9' 0"	7' 7"	9' 5"	8' 2"	6' 11"	8' 5"	7' 7"	6' 5"	7' 8"	7' 2"	6' 0"	7' 2"	6' 10"	5' 9"	6' 8" e	6' 6" e	5' 6"
250S162-33	24	33	8' 11"	7' 11"	6' 8"	7' 8"	7' 2"	6' 0"	6' 11"	6' 8"	5' 7"	6' 3" e	6' 3" e	5' 3"	5' 10" e	5' 10" e	5' 0" e	5' 5" e	5' 5" e	4' 10" e
250S162-43	12	33	12' 4"	10' 10"	9' 1"	11' 3"	9' 10"	8' 3"	10' 5"	9' 1"	7' 8"	9' 10"	8' 7"	7' 3"	9' 4"	8' 2"	6' 10"	8' 11"	7' 9"	6' 7"
250S162-43	16	33	11' 3"	9' 10"	8' 3"	10' 2"	8' 11"	7' 6"	9' 6"	8' 3"	7' 0"	8' 11"	7' 9"	6' 7"	8' 6"	7' 5"	6' 3"	8' 1"	7' 1"	6' 0"
250S162-43	24	33	9' 10"	8' 7"	7' 3"	8' 11"	7' 9"	6' 7"	8' 3"	7' 3"	6' 1"	7' 7"	6' 10"	5' 9"	7' 1"	6' 6"	5' 5"	6' 7"	6' 2"	5' 3"
250S162-54	12	33	13' 3"	11' 7"	9' 9"	12' 0"	10' 6"	8' 10"	11' 2"	9' 9"	8' 3"	10' 6"	9' 2"	7' 9"	10' 0"	8' 8"	7' 4"	9' 6"	8' 4"	7' 0"
250S162-54	16	33	12' 0"	10' 6"	8' 10"	10' 11"	9' 6"	8' 0"	10' 2"	8' 10"	7' 6"	9' 6"	8' 4"	7' 0"	9' 1"	7' 11"	6' 8"	8' 8"	7' 7"	6' 5"
250S162-54	24	33	10' 6"	9' 2"	7' 9"	9' 6"	8' 4"	7' 0"	8' 10"	7' 9"	6' 6"	8' 4"	7' 3"	6' 2"	7' 11"	6' 11"	5' 10"	7' 5"	6' 7"	5' 7"
250S162-54	12	50	13' 3"	11' 7"	9' 9"	12' 0"	10' 6"	8' 10"	11' 2"	9' 9"	8' 3"	10' 6"	9' 2"	7' 9"	10' 0"	8' 8"	7' 4"	9' 6"	8' 4"	7' 0"
250S162-54	16	50	12' 0"	10' 6"	8' 10"	10' 11"	9' 6"	8' 0"	10' 2"	8' 10"	7' 6"	9' 6"	8' 4"	7' 0"	9' 1"	7' 11"	6' 8"	8' 8"	7' 7"	6' 5"
250S162-54	24	50	10' 6"	9' 2"	7' 9"	9' 6"	8' 4"	7' 0"	8' 10"	7' 9"	6' 6"	8' 4"	7' 3"	6' 2"	7' 11"	6' 11"	5' 10"	7' 7"	6' 7"	5' 7"
250S162-68	12	33	14' 1"	12' 4"	10' 5"	12' 10"	11' 2"	9' 5"	11' 11"	10' 5"	8' 9"	11' 2"	9' 9"	8' 3"	10' 8"	9' 4"	7' 10"	10' 2"	8' 11"	7' 6"
250S162-68	16	33	12' 10"	11' 2"	9' 5"	11' 8"	10' 2"	8' 7"	10' 10"	9' 5"	8' 0"	10' 2"	8' 11"	7' 6"	9' 8"	8' 5"	7' 1"	9' 3"	8' 1"	6' 10"
250S162-68	24	33	11' 2"	9' 9"	8' 3"	10' 2"	8' 11"	7' 6"	9' 5"	8' 3"	7' 0"	8' 11"	7' 9"	6' 7"	8' 5"	7' 5"	6' 3"	8' 1"	7' 1"	5' 11"
250S162-68	12	50	14' 1"	12' 4"	10' 5"	12' 10"	11' 2"	9' 5"	11' 11"	10' 5"	8' 9"	11' 2"	9' 9"	8' 3"	10' 8"	9' 4"	7' 10"	10' 2"	8' 11"	7' 6"
250S162-68	16	50	12' 10"	11' 2"	9' 5"	11' 8"	10' 2"	8' 7"	10' 10"	9' 5"	8' 0"	10' 2"	8' 11"	7' 6"	9' 8"	8' 5"	7' 1"	9' 3"	8' 1"	6' 10"
250S162-68	24	50	11' 2"	9' 9"	8' 3"	10' 2"	8' 11"	7' 6"	9' 5"	8' 3"	7' 0"	8' 11"	7' 9"	6' 7"	8' 5"	7' 5"	6' 3"	8' 1"	7' 1"	5' 11"
350S162-33	12	33	14' 8"	12' 10"	10' 10"	13' 0"	11' 8"	9' 10"	11' 8"	10' 10"	9' 2"	10' 8"	10' 2"	8' 7"	9' 10" e	9' 8" e	8' 2"	9' 2" e	9' 2" e	7' 10"
350S162-33	16	33	13' 0"	11' 8"	9' 10"	11' 3"	10' 7"	8' 11"	10' 1" e	9' 10"	8' 4"	9' 2" e	9' 2" e	7' 10"	8' 6" e	8' 6" e	7' 5" e	8' 0" e	8' 0" e	7' 1" e
350S162-33	24	33	10' 8"	10' 2"	8' 7"	9' 2" e	9' 2" e	7' 10"	8' 3" e	8' 3" e	7' 3" e	7' 6" e	7' 6" e	6' 10" e	7' 0" e	7' 0" e	6' 6" e	6' 6" e	6' 6" e	6' 2" e
350S162-43	12	33	16' 0"	14' 0"	11' 9"	14' 6"	12' 8"	10' 8"	13' 6"	11' 9"	9' 11"	12' 6"	11' 1"	9' 4"	11' 7"	10' 6"	8' 11"	10' 10"	10' 1"	8' 6"
350S162-43	16	33	14' 6"	12' 8"	10' 8"	13' 2"	11' 6"	9' 9"	11' 10"	10' 8"	9' 0"	10' 10"	10' 1"	8' 6"	10' 0"	9' 7"	8' 1"	9' 5"	9' 2"	7' 9"
350S162-43	24	33	12' 6"	11' 1"	9' 4"	10' 10"	10' 1"	8' 6"	9' 8"	9' 4"	7' 11"	8' 10"	8' 10"	7' 5"	8' 2" e	8' 2" e	7' 1"	7' 8" e	7' 8" e	6' 9"
350S162-54	12	33	17' 2"	15' 0"	12' 7"	15' 7"	13' 7"	11' 6"	14' 5"	12' 7"	10' 8"	13' 7"	11' 10"	10' 0"	12' 11"	11' 3"	9' 6"	12' 2"	10' 9"	9' 1"
350S162-54	16	33	15' 7"	13' 7"	11' 6"	14' 2"	12' 4"	10' 5"	13' 1"	11' 6"	9' 8"	12' 2"	10' 9"	9' 1"	11' 3"	10' 3"	8' 8"	10' 6"	9' 10"	8' 3"
350S162-54	24	33	13' 7"	11' 10"	10' 0"	12' 2"	10' 9"	9' 1"	10' 10"	10' 0"	8' 5"	9' 11"	9' 5"	7' 11"	9' 2"	8' 11"	7' 7"	8' 7"	8' 7"	7' 3"
350S162-54	12	50	17' 2"	15' 0"	12' 7"	15' 7"	13' 7"	11' 6"	14' 5"	12' 7"	10' 8"	13' 7"	11' 10"	10' 0"	12' 11"	11' 3"	9' 6"	12' 4"	10' 9"	9' 1"
350S162-54	16	50	15' 7"	13' 7"	11' 6"	14' 2"	12' 4"	10' 5"	13' 1"	11' 6"	9' 8"	12' 4"	10' 9"	9' 1"	11' 9"	10' 3"	8' 8"	11' 3"	9' 10"	8' 3"
350S162-54	24	50	13' 7"	11' 10"	10' 0"	12' 4"	10' 9"	9' 1"	11' 6"	10' 0"	8' 5"	10' 9"	9' 5"	7' 11"	10' 3"	8' 11"	7' 7"	9' 10"	8' 7"	7' 3"
350S162-68	12	33	18' 4"	16' 0"	13' 6"	16' 8"	14' 6"	12' 3"	15' 5"	13' 6"	11' 5"	14' 6"	12' 8"	10' 9"	13' 10"	12' 1"	10' 2"	13' 3"	11' 6"	9' 9"
350S162-68	16	33	16' 8"	14' 6"	12' 3"	15' 1"	13' 3"	11' 2"	14' 0"	12' 3"	10' 4"	13' 3"	11' 6"	9' 9"	12' 7"	11' 0"	9' 3"	12' 0"	10' 6"	8' 10"
350S162-68	24	33	14' 6"	12' 8"	10' 9"	13' 3"	11' 6"	9' 9"	12' 3"	10' 9"	9' 0"	11' 6"	10' 1"	8' 6"	10' 11"	9' 7"	8' 1"	10' 3"	9' 2"	7' 9"
350S162-68	12	50	18' 4"	16' 0"	13' 6"	16' 8"	14' 6"	12' 3"	15' 5"	13' 6"	11' 5"	14' 6"	12' 8"	10' 9"	13' 10"	12' 1"	10' 2"	13' 3"	11' 6"	9' 9"
350S162-68	16	50	16' 8"	14' 6"	12' 3"	15' 1"	13' 3"	11' 2"	14' 0"	12' 3"	10' 4"	13' 3"	11' 6"	9' 9"	12' 7"	11' 0"	9' 3"	12' 0"	10' 6"	8' 10"
350S162-68	24	50	14' 6"	12' 8"	10' 9"	13' 3"	11' 6"	9' 9"	12' 3"	10' 9"	9' 0"	11' 6"	10' 1"	8' 6"	11' 0"	9' 7"	8' 1"	10' 6"	9' 2"	7' 9"
350S162-97	12	33	20' 2"	17' 8"	14' 11"	18' 4"	16' 0"	13' 6"	17' 0"	14' 11"	12' 7"	16' 0"	14' 0"	11' 10"	15' 3"	13' 4"	11' 3"	14' 7"	12' 9"	10' 9"
350S162-97	16	33	18' 4"	16' 0"	13' 6"	16' 8"	14' 7"	12' 3"	15' 6"	13' 6"	11' 5"	14' 7"	12' 9"	10' 9"	13' 10"	12' 1"	10' 2"	13' 3"	11' 7"	9' 9"
350S162-97	24	33	16' 0"	14' 0"	11' 10"	14' 7"	12' 9"	10' 9"	13' 6"	11' 10"	10' 0"	12' 9"	11' 1"	9' 5"	11' 11"	10' 7"	8' 11"	11' 2"	10' 1"	8' 6"
350S162-97	12	50	20' 2"	17' 8"	14' 11"	18' 4"	16' 0"	13' 6"	17' 0"	14' 11"	12' 7"	16' 0"	14' 0"	11' 10"	15' 3"	13' 4"	11' 3"	14' 7"	12' 9"	10' 9"
350S162-97	16	50	18' 4"	16' 0"	13' 6"	16' 8"	14' 7"	12' 3"	15' 6"	13' 6"	11' 5"	14' 7"	12' 9"	10' 9"	13' 10"	12' 1"	10' 2"	13' 3"	11' 7"	9' 9"
350S162-97	24	50	16' 0"	14' 0"	11' 10"	14' 7"	12' 9"	10' 9"	13' 6"	11' 10"	10' 0"	12' 9"	11' 1"	9' 5"	12' 1"	10' 7"	8' 11"	11' 7"	10' 1"	8' 6"
350S200-43	12	33	16' 11"	14' 9"	12' 5"	15' 4"	13' 5"	11' 4"	14' 3"	12' 5"	10' 6"	13' 5"	11' 9"	9' 11"	12' 6"	11' 1"	9' 5"	11' 9"	10' 8"	9' 0"
350S200-43	16	33	15' 4"	13' 5"	11' 4"	13' 11"	12' 2"	10' 3"	12' 10"	11' 4"	9' 6"	11' 9"	10' 8"	9' 0"	10' 10"	10' 1"	8' 6"	10' 2"	9' 8"	8' 2"
350S200-43	24	33	13' 5"	11' 9"	9' 11"	11' 9"	10' 8"	9' 0"	10' 6"	9' 11"	8' 4"	9' 7" e	9' 4" e	7' 10"	8' 10" e	8' 10" e	7' 5"	8' 3" e	8' 3" e	7' 1" e

See Curtain Wall Limiting Heights Table Notes on page 25.

Limiting Wall Heights - Curtain Wall

Stud Member	Spacing, in, oc	Fy, ksi	15 psf			20 psf			25 psf			30 psf			35 psf			40 psf		
			L/240	L/360	L/600	L/240	L/360	L/600	L/240	L/360	L/600	L/240	L/360	L/600	L/240	L/360	L/600	L/240	L/360	L/600
350S200-54	12	33	18' 1"	15' 10"	13' 4"	16' 5"	14' 4"	12' 1"	15' 3"	13' 4"	11' 3"	14' 4"	12' 7"	10' 7"	13' 8"	11' 11"	10' 1"	13' 1"	11' 5"	9' 7"
350S200-54	16	33	16' 5"	14' 4"	12' 1"	14' 11"	13' 1"	11' 0"	13' 10"	12' 1"	10' 3"	13' 1"	11' 5"	9' 7"	12' 5"	10' 10"	9' 2"	11' 7"	10' 4"	8' 9"
350S200-54	24	33	14' 4"	12' 7"	10' 7"	13' 1"	11' 5"	9' 7"	12' 0"	10' 7"	8' 11"	10' 11"	10' 0"	8' 5"	10' 1"	9' 6"	8' 0"	9' 5"	9' 1"	7' 8"
350S200-54	12	50	18' 1"	15' 10"	13' 4"	16' 5"	14' 4"	12' 1"	15' 3"	13' 4"	11' 3"	14' 4"	12' 7"	10' 7"	13' 8"	11' 11"	10' 1"	13' 1"	11' 5"	9' 7"
350S200-54	16	50	16' 5"	14' 4"	12' 1"	14' 11"	13' 1"	11' 0"	13' 10"	12' 1"	10' 3"	13' 1"	11' 5"	9' 7"	12' 5"	10' 10"	9' 2"	11' 10"	10' 4"	8' 9"
350S200-54	24	50	14' 4"	12' 7"	10' 7"	13' 1"	11' 5"	9' 7"	12' 1"	10' 7"	8' 11"	11' 5"	10' 0"	8' 5"	10' 10"	9' 6"	8' 0"	10' 4"	9' 1"	7' 8"
350S200-68	12	33	19' 5"	16' 11"	14' 3"	17' 7"	15' 5"	13' 0"	16' 4"	14' 3"	12' 1"	15' 5"	13' 5"	11' 4"	14' 7"	12' 9"	10' 9"	14' 0"	12' 3"	10' 4"
350S200-68	16	33	17' 7"	15' 5"	13' 0"	16' 0"	14' 0"	11' 9"	14' 10"	13' 0"	10' 11"	14' 0"	12' 3"	10' 4"	13' 3"	11' 7"	9' 9"	12' 8"	11' 1"	9' 4"
350S200-68	24	33	15' 5"	13' 5"	11' 4"	14' 0"	12' 3"	10' 4"	13' 0"	11' 4"	9' 7"	12' 1"	10' 8"	9' 0"	11' 2"	10' 2"	8' 7"	10' 6"	9' 8"	8' 2"
350S200-68	12	50	19' 5"	16' 11"	14' 3"	17' 7"	15' 5"	13' 0"	16' 4"	14' 3"	12' 1"	15' 5"	13' 5"	11' 4"	14' 7"	12' 9"	10' 9"	14' 0"	12' 3"	10' 4"
350S200-68	16	50	17' 7"	15' 5"	13' 0"	16' 0"	14' 0"	11' 9"	14' 10"	13' 0"	10' 11"	14' 0"	12' 3"	10' 4"	13' 3"	11' 7"	9' 9"	12' 8"	11' 1"	9' 4"
350S200-68	24	50	15' 5"	13' 5"	11' 4"	14' 0"	12' 3"	10' 4"	13' 0"	11' 4"	9' 7"	12' 3"	10' 8"	9' 0"	11' 7"	10' 2"	8' 7"	11' 1"	9' 8"	8' 2"
350S200-97	12	33	21' 5"	18' 9"	15' 10"	19' 6"	17' 0"	14' 4"	18' 1"	15' 10"	13' 4"	17' 0"	14' 10"	12' 6"	16' 2"	14' 1"	11' 11"	15' 5"	13' 6"	11' 5"
350S200-97	16	33	19' 6"	17' 0"	14' 4"	17' 8"	15' 5"	13' 0"	16' 5"	14' 4"	12' 1"	15' 5"	13' 6"	11' 5"	14' 8"	12' 10"	10' 10"	14' 1"	12' 3"	10' 4"
350S200-97	24	33	17' 0"	14' 10"	12' 6"	15' 5"	13' 6"	11' 5"	14' 4"	12' 6"	10' 7"	13' 6"	11' 10"	9' 11"	12' 10"	11' 2"	9' 5"	12' 2"	10' 9"	9' 0"
350S200-97	12	50	21' 5"	18' 9"	15' 10"	19' 6"	17' 0"	14' 4"	18' 1"	15' 10"	13' 4"	17' 0"	14' 10"	12' 6"	16' 2"	14' 1"	11' 11"	15' 5"	13' 6"	11' 5"
350S200-97	16	50	19' 6"	17' 0"	14' 4"	17' 8"	15' 5"	13' 0"	16' 5"	14' 4"	12' 1"	15' 5"	13' 6"	11' 5"	14' 8"	12' 10"	10' 10"	14' 1"	12' 3"	10' 4"
350S200-97	24	50	17' 0"	14' 10"	12' 6"	15' 5"	13' 6"	11' 5"	14' 4"	12' 6"	10' 7"	13' 6"	11' 10"	9' 11"	12' 10"	11' 2"	9' 5"	12' 3"	10' 9"	9' 0"
362S137-33	12	33	14' 3"	12' 7"	10' 7"	12' 4"	11' 5"	9' 8"	11' 1"	10' 7"	8' 11"	10' 1"	10' 0"	8' 5"	9' 4"	9' 4"	8' 0"	8' 9" e	8' 9" e	7' 8"
362S137-33	16	33	12' 4"	11' 5"	9' 8"	10' 9"	10' 5"	8' 9"	9' 7"	9' 7"	8' 2"	8' 9" e	8' 9" e	7' 8"	8' 1" e	8' 1" e	7' 3" e	7' 7" e	7' 7" e	6' 11" e
362S137-33	24	33	10' 1"	10' 0"	8' 5"	8' 9" e	8' 9" e	7' 8"	7' 10" e	7' 10" e	7' 1" e	7' 2" e	7' 2" e	6' 8" e	6' 7" e	6' 7" e	6' 4" e	6' 2" e	6' 2" e	6' 1" e
362S137-43	12	33	15' 8"	13' 8"	11' 7"	14' 3"	12' 5"	10' 6"	13' 0"	11' 7"	9' 9"	11' 10"	10' 10"	9' 2"	11' 0"	10' 4"	8' 8"	10' 3"	9' 10"	8' 4"
362S137-43	16	33	14' 3"	12' 5"	10' 6"	12' 7"	11' 4"	9' 6"	11' 3"	10' 6"	8' 10"	10' 3"	9' 10"	8' 4"	9' 6"	9' 5"	7' 11"	8' 11"	8' 11"	7' 7"
362S137-43	24	33	11' 10"	10' 10"	9' 2"	10' 3"	9' 10"	8' 4"	9' 2"	9' 2"	7' 9"	8' 5"	8' 5"	7' 3"	7' 9"	7' 9"	6' 11"	7' 3" e	7' 3" e	6' 7"
362S137-54	12	33	16' 9"	14' 8"	12' 4"	15' 3"	13' 4"	11' 3"	14' 2"	12' 4"	10' 5"	13' 3"	11' 8"	9' 10"	12' 4"	11' 1"	9' 4"	11' 6"	10' 7"	8' 11"
362S137-54	16	33	15' 3"	13' 4"	11' 3"	13' 10"	12' 1"	10' 2"	12' 7"	11' 3"	9' 6"	11' 6"	10' 7"	8' 11"	10' 8"	10' 0"	8' 6"	10' 0"	9' 7"	8' 1"
362S137-54	24	33	13' 3"	11' 8"	9' 10"	11' 6"	10' 7"	8' 11"	10' 4"	9' 10"	8' 3"	9' 5"	9' 3"	7' 9"	8' 8"	8' 8"	7' 5"	8' 2"	8' 2"	7' 1"
362S137-54	12	50	16' 9"	14' 8"	12' 4"	15' 3"	13' 4"	11' 3"	14' 2"	12' 4"	10' 5"	13' 4"	11' 8"	9' 10"	12' 8"	11' 1"	9' 4"	12' 1"	10' 7"	8' 11"
362S137-54	16	50	15' 3"	13' 4"	11' 3"	13' 10"	12' 1"	10' 2"	12' 10"	11' 3"	9' 6"	12' 1"	10' 7"	8' 11"	11' 6"	10' 0"	8' 6"	11' 0"	9' 7"	8' 1"
362S137-54	24	50	13' 4"	11' 8"	9' 10"	12' 1"	10' 7"	8' 11"	11' 3"	9' 10"	8' 3"	10' 7"	9' 3"	7' 9"	10' 0"	8' 9"	7' 5"	9' 7"	8' 5"	7' 1"
362S137-68	12	33	17' 11"	15' 8"	13' 2"	16' 3"	14' 3"	12' 0"	15' 1"	13' 2"	11' 2"	14' 3"	12' 5"	10' 6"	13' 6"	11' 10"	9' 11"	12' 10"	11' 4"	9' 6"
362S137-68	16	33	16' 3"	14' 3"	12' 0"	14' 10"	12' 11"	10' 11"	13' 9"	12' 0"	10' 1"	12' 10"	11' 4"	9' 6"	11' 10"	10' 9"	9' 1"	11' 1"	10' 3"	8' 8"
362S137-68	24	33	14' 3"	12' 5"	10' 6"	12' 10"	11' 4"	9' 6"	11' 5"	10' 6"	8' 10"	10' 5"	9' 10"	8' 4"	9' 8"	9' 4"	7' 11"	9' 1"	9' 0"	7' 7"
362S137-68	12	50	17' 11"	15' 8"	13' 2"	16' 3"	14' 3"	12' 0"	15' 1"	13' 2"	11' 2"	14' 3"	12' 5"	10' 6"	13' 6"	11' 10"	9' 11"	12' 11"	11' 4"	9' 6"
362S137-68	16	50	16' 3"	14' 3"	12' 0"	14' 10"	12' 11"	10' 11"	13' 9"	12' 0"	10' 1"	12' 11"	11' 4"	9' 6"	12' 3"	10' 9"	9' 1"	11' 9"	10' 3"	8' 8"
362S137-68	24	50	14' 3"	12' 5"	10' 6"	12' 11"	11' 4"	9' 6"	12' 0"	10' 6"	8' 10"	11' 4"	9' 10"	8' 4"	10' 9"	9' 4"	7' 11"	10' 3"	9' 0"	7' 7"
362S162-33	12	33	15' 1"	13' 2"	11' 1"	13' 3"	12' 0"	10' 1"	11' 11"	11' 1"	9' 5"	10' 10"	10' 6"	8' 10"	10' 0" e	9' 11" e	8' 5"	9' 5" e	9' 5" e	8' 0"
362S162-33	16	33	13' 3"	12' 0"	10' 1"	11' 6"	10' 11"	9' 2"	10' 3" e	10' 1" e	8' 6"	9' 5" e	9' 5" e	8' 0"	8' 8" e	8' 8" e	7' 7" e	8' 2" e	8' 2" e	7' 3" e
362S162-33	24	33	10' 10"	10' 6"	8' 10"	9' 5" e	9' 5" e	8' 0"	8' 5" e	8' 5" e	7' 5" e	7' 8" e	7' 8" e	7' 0" e	7' 1" e	7' 1" e	6' 8" e	6' 8" e	6' 8" e	6' 4" e
362S162-43	12	33	16' 5"	14' 4"	12' 1"	14' 11"	13' 0"	11' 0"	13' 10"	12' 1"	10' 2"	12' 9"	11' 5"	9' 7"	11' 10"	10' 10"	9' 1"	11' 1"	10' 4"	8' 9"
362S162-43	16	33	14' 11"	13' 0"	11' 0"	13' 7"	11' 10"	10' 0"	12' 1"	11' 0"	9' 3"	11' 1"	10' 4"	8' 9"	10' 3"	9' 10"	8' 3"	9' 7"	9' 5"	7' 11"
362S162-43	24	33	12' 9"	11' 5"	9' 7"	11' 1"	10' 4"	8' 9"	9' 11"	9' 7"	8' 1"	9' 0"	9' 0"	7' 7"	8' 4" e	8' 4" e	7' 3"	7' 10" e	7' 10" e	6' 11" e
362S162-54	12	33	17' 7"	15' 4"	13' 0"	16' 0"	14' 0"	11' 9"	14' 10"	13' 0"	10' 11"	14' 0"	12' 2"	10' 3"	13' 3"	11' 7"	9' 9"	12' 5"	11' 1"	9' 4"
362S162-54	16	33	16' 0"	14' 0"	11' 9"	14' 6"	12' 8"	10' 8"	13' 6"	11' 9"	9' 11"	12' 5"	11' 1"	9' 4"	11' 6"	10' 6"	8' 11"	10' 9"	10' 1"	8' 6"
362S162-54	24	33	14' 0"	12' 2"	10' 3"	12' 5"	11' 1"	9' 4"	11' 1"	10' 3"	8' 8"	10' 1"	9' 8"	8' 2"	9' 4"	9' 2"	7' 9"	8' 9"	8' 9"	7' 5"
362S162-54	12	50	17' 7"	15' 4"	13' 0"	16' 0"	14' 0"	11' 9"	14' 10"	13' 0"	10' 11"	14' 0"	12' 2"	10' 3"	13' 3"	11' 7"	9' 9"	12' 8"	11' 1"	9' 4"
362S162-54	16	50	16' 0"	14' 0"	11' 9"	14' 6"	12' 8"	10' 8"	13' 6"	11' 9"	9' 11"	12' 8"	11' 1"	9' 4"	12' 1"	10' 6"	8' 11"	11' 6"	10' 1"	8' 6"
362S162-54	24	50	14' 0"	12' 2"	10' 3"	12' 8"	11' 1"	9' 4"	11' 9"	10' 3"	8' 8"	11' 1"	9' 8"	8' 2"	10' 6"	9' 2"	7' 9"	10' 1"	8' 10"	7' 5"
362S162-68	12	33	18' 10"	16' 5"	13' 10"	17' 1"	14' 11"	12' 7"	15' 11"	13' 10"	11' 8"	14' 11"	13' 1"	11' 0"	14' 2"	12' 5"	10' 6"	13' 7"	11' 10"	10' 0"
362S162-68	16	33	17' 1"	14' 11"	12' 7"	15' 6"	13' 7"	11' 5"	14' 5"	12' 7"	10' 8"	13' 7"	11' 10"	10' 0"	12' 9"	11' 3"	9' 6"	11' 11"	10' 9"	9' 1"
362S162-68	24	33	14' 11"	13' 1"	11' 0"	13' 7"	11' 10"	10' 0"	12' 4"	11' 0"	9' 3"	11' 3"	10' 4"	8' 9"	10' 5"	9' 10"	8' 4"	9' 9"	9' 5"	7' 11"
362S162-68	12	50	18' 10"	16' 5"	13' 10"	17' 1"	14' 11"	12' 7"	15' 11"	13' 10"	11' 8"	14' 11"	13' 1"	11' 0"	14' 2"	12' 5"	10' 6"	13' 7"	11' 10"	10' 0"
362S162-68	16	50	17' 1"	14' 11"	12' 7"	15' 6"	13' 7"	11' 5"	14' 5"	12' 7"	10' 8"	13' 7"	11' 10"	10' 0"	12' 11"	11' 3"	9' 6"	12' 4"	10' 9"	9' 1"
362S162-68	24	50	14' 11"	13' 1"	11' 0"	13' 7"	11' 10"	10' 0"	12' 7"	11' 0"	9' 3"	11' 10"	10' 4"	8' 9"	11' 3"	9' 10"	8' 4"	10' 9"	9' 5"	7' 11"
362S162-97	12	33	20' 9"	18' 2"	15' 4"	18' 10"	16' 6"	13' 11"	17' 6"	15' 4"	12' 11"	16' 6"	14' 5"	12' 2"	15' 8"	13' 8"	11' 6"	15' 0"	13' 1"	11' 0"
362S162-97	16	33	18' 10"	16' 6"	13' 11"	17' 2"	15' 0"	12' 8"	15' 11"	13' 11"	11' 9"	15' 0"	13' 1"	11' 0"	14' 3"	12' 5"	10' 6"	13' 7"	11' 11"	10' 0"
362S162-97	24	33	16' 6"	14' 5"	12' 2"	15' 0"	13' 1"	11' 0"	13' 11"	12' 2"	10' 3"	13' 1"	11' 5"	9' 8"	12' 3"	10' 10"	9' 2"	11' 5"	10' 5"	8' 9"
362S162-97	12	50	20' 9"	18' 2"	15' 4"	18' 10"	16' 6"	13' 11"	17' 6"	15' 4"	12' 11"	16' 6"	14' 5"	12' 2"	15' 8"	13' 8"	11' 6"	15' 0"	13' 1"	11' 0"
362S162-97	16	50	18' 10"	16' 6"	13' 11"	17' 2"	15' 0"	12' 8"	15' 11"	13' 11"	11' 9"	15' 0"	13' 1"	11' 0"	14' 3"	12' 5"	10' 6"	13' 7"	11' 11"	10' 0"
362S162-97	24	50	16' 6"	14' 5"	12' 2"	15' 0"	13' 1"	11' 0"	13' 11"	12' 2"	10' 3"	13' 1"	11' 5"	9' 8"	12' 5"	10' 10"	9' 2"	11' 11"	10' 5"	8' 9"
362S200-33	12	33	15' 11"	13' 11"	11' 8"	13' 11"	12' 7"	10' 8"	12' 5"	11' 8"	9' 10"	11' 4" e	11' 0" e	9' 3"	10' 6" e	10' 6" e	8' 10"	9' 10" e	9' 10" e	8' 5" e
362S200-33	16	33	13' 11"	12' 7"	10' 8"	12' 1"	11' 5"	9' 8"	10' 9" e	10' 8" e	9' 0"	9' 10" e	9' 10" e	8' 5" e	9' 1" e	9' 1" e	8' 0" e	8' 6" e	8' 6" e	7' 8" e
362S200-33	24	33	11' 4" e	11' 0" e	9' 3"	9' 10" e	9' 10" e	8' 5" e	8' 10" e	8' 10" e	7' 10" e	8' 0" e	8' 0" e	7' 4" e	7' 5" e	7' 5" e	7' 0" e	7' 0" e	7' 0" e	6' 8" e

See Curtain Wall Limiting Heights Table Notes on page 25.

Limiting Wall Heights - Curtain Wall

Stud Member	Spacing, in, oc	Fy, ksi	15 psf			20 psf			25 psf			30 psf			35 psf			40 psf		
			L/240	L/360	L/600	L/240	L/360	L/600	L/240	L/360	L/600	L/240	L/360	L/600	L/240	L/360	L/600	L/240	L/360	L/600
362S200-43	12	33	17' 4"	15' 2"	12' 9"	15' 9"	13' 9"	11' 7"	14' 8"	12' 9"	10' 9"	13' 8"	12' 0"	10' 2"	12' 8"	11' 5"	9' 8"	11' 10"	10' 11"	9' 3"
362S200-43	16	33	15' 9"	13' 9"	11' 7"	14' 4"	12' 6"	10' 7"	13' 0"	11' 7"	9' 10"	11' 10"	10' 11"	9' 3"	11' 0"	10' 5"	8' 9"	10' 3"	9' 11"	8' 4"
362S200-43	24	33	13' 8"	12' 0"	10' 2"	11' 10"	10' 11"	9' 3"	10' 7"	10' 2"	8' 7"	9' 8" e	9' 7" e	8' 1"	9' 0" e	9' 0" e	7' 8"	8' 5" e	8' 5" e	7' 4" e
362S200-54	12	33	18' 7"	16' 3"	13' 8"	16' 11"	14' 9"	12' 5"	15' 8"	13' 8"	11' 7"	14' 9"	12' 11"	10' 11"	14' 0"	12' 3"	10' 4"	13' 5"	11' 9"	9' 11"
362S200-54	16	33	16' 11"	14' 9"	12' 5"	15' 4"	13' 5"	11' 4"	14' 3"	12' 5"	10' 6"	13' 5"	11' 9"	9' 11"	12' 6"	11' 2"	9' 5"	11' 8"	10' 8"	9' 0"
362S200-54	24	33	14' 9"	12' 11"	10' 11"	13' 5"	11' 9"	9' 11"	12' 1"	10' 11"	9' 2"	11' 0"	10' 3"	8' 8"	10' 2"	9' 9"	8' 2"	9' 7"	9' 4"	7' 10"
362S200-54	12	50	18' 7"	16' 3"	13' 8"	16' 11"	14' 9"	12' 5"	15' 8"	13' 8"	11' 7"	14' 9"	12' 11"	10' 11"	14' 0"	12' 3"	10' 4"	13' 5"	11' 9"	9' 11"
362S200-54	16	50	16' 11"	14' 9"	12' 5"	15' 4"	13' 5"	11' 4"	14' 3"	12' 5"	10' 6"	13' 5"	11' 9"	9' 11"	12' 9"	11' 2"	9' 5"	12' 2"	10' 8"	9' 0"
362S200-54	24	50	14' 9"	12' 11"	10' 11"	13' 5"	11' 9"	9' 11"	12' 5"	10' 11"	9' 2"	11' 9"	10' 3"	8' 8"	11' 2"	9' 9"	8' 2"	10' 8"	9' 4"	7' 10"
362S200-68	12	33	19' 11"	17' 5"	14' 8"	18' 1"	15' 10"	13' 4"	16' 10"	14' 8"	12' 5"	15' 10"	13' 10"	11' 8"	15' 0"	13' 1"	11' 1"	14' 4"	12' 7"	10' 7"
362S200-68	16	33	18' 1"	15' 10"	13' 4"	16' 5"	14' 4"	12' 1"	15' 3"	13' 4"	11' 3"	14' 4"	12' 7"	10' 7"	13' 8"	11' 11"	10' 1"	13' 1"	11' 5"	9' 7"
362S200-68	24	33	15' 10"	13' 10"	11' 8"	14' 4"	12' 7"	10' 7"	13' 4"	11' 8"	9' 10"	12' 7"	11' 0"	9' 3"	11' 11"	10' 5"	8' 9"	11' 3"	10' 0"	8' 5"
362S200-68	12	50	19' 11"	17' 5"	14' 8"	18' 1"	15' 10"	13' 4"	16' 10"	14' 8"	12' 5"	15' 10"	13' 10"	11' 8"	15' 0"	13' 1"	11' 1"	14' 4"	12' 7"	10' 7"
362S200-68	16	50	18' 1"	15' 10"	13' 4"	16' 5"	14' 4"	12' 1"	15' 3"	13' 4"	11' 3"	14' 4"	12' 7"	10' 7"	13' 8"	11' 11"	10' 1"	13' 1"	11' 5"	9' 7"
362S200-68	24	50	15' 10"	13' 10"	11' 8"	14' 4"	12' 7"	10' 7"	13' 4"	11' 8"	9' 10"	12' 7"	11' 0"	9' 3"	11' 11"	10' 5"	8' 9"	11' 5"	10' 0"	8' 5"
362S200-97	12	33	22' 0"	19' 3"	16' 3"	20' 0"	17' 6"	14' 9"	18' 7"	16' 3"	13' 8"	17' 6"	15' 3"	12' 11"	16' 7"	14' 6"	12' 3"	15' 11"	13' 11"	11' 8"
362S200-97	16	33	20' 0"	17' 6"	14' 9"	18' 2"	15' 11"	13' 5"	16' 11"	14' 9"	12' 5"	15' 11"	13' 11"	11' 8"	15' 1"	13' 2"	11' 1"	14' 5"	12' 7"	10' 8"
362S200-97	24	33	17' 6"	15' 3"	12' 11"	15' 11"	13' 11"	11' 8"	14' 9"	12' 11"	10' 10"	13' 11"	12' 1"	10' 3"	13' 2"	11' 6"	9' 9"	12' 6"	11' 0"	9' 3"
362S200-97	12	50	22' 0"	19' 3"	16' 3"	20' 0"	17' 6"	14' 9"	18' 7"	16' 3"	13' 8"	17' 6"	15' 3"	12' 11"	16' 7"	14' 6"	12' 3"	15' 11"	13' 11"	11' 8"
362S200-97	16	50	20' 0"	17' 6"	14' 9"	18' 2"	15' 11"	13' 5"	16' 11"	14' 9"	12' 5"	15' 11"	13' 11"	11' 8"	15' 1"	13' 2"	11' 1"	14' 5"	12' 7"	10' 8"
362S200-97	24	50	17' 6"	15' 3"	12' 11"	15' 11"	13' 11"	11' 8"	14' 9"	12' 11"	10' 10"	13' 11"	12' 1"	10' 3"	13' 2"	11' 6"	9' 9"	12' 7"	11' 0"	9' 3"
362S250-33	12	33	16' 6"	14' 5"	12' 2"	14' 7"	13' 2"	11' 1"	13' 0"	12' 2"	10' 3"	11' 11" e	11' 6" e	9' 8"	11' 0" e	10' 11" e	9' 2"	10' 4" e	10' 4" e	8' 9" e
362S250-33	16	33	14' 7"	13' 2"	11' 1"	12' 7" e	11' 11"	10' 1"	11' 3" e	11' 1" e	9' 4"	10' 4" e	10' 4" e	8' 9" e	9' 6" e	9' 6" e	8' 4" e	8' 11" e	8' 11" e	8' 0" e
362S250-33	24	33	11' 11" e	11' 6" e	9' 8"	10' 4" e	10' 4" e	8' 9" e	9' 3" e	9' 3" e	8' 2" e	8' 5" e	8' 5" e	7' 8" e	7' 9" e	7' 9" e	7' 4" e	7' 3" e	7' 3" e	7' 0" e
362S250-43	12	33	18' 4"	16' 0"	13' 6"	16' 7"	14' 6"	12' 3"	15' 5"	13' 6"	11' 4"	14' 2"	12' 8"	10' 8"	13' 1"	12' 1"	10' 2"	12' 3"	11' 6"	9' 9"
362S250-43	16	33	16' 7"	14' 6"	12' 3"	15' 0"	13' 2"	11' 2"	13' 5"	12' 3"	10' 4"	12' 3"	11' 6"	9' 9"	11' 4"	10' 11"	9' 3"	10' 8" e	10' 6" e	8' 10"
362S250-43	24	33	14' 2"	12' 8"	10' 8"	12' 3"	11' 6"	9' 9"	11' 0"	10' 8"	9' 0"	10' 0" e	10' 0" e	8' 6"	9' 3" e	9' 3" e	8' 1" e	8' 8" e	8' 8" e	7' 9" e
362S250-54	12	33	19' 7"	17' 2"	14' 6"	17' 10"	15' 7"	13' 2"	16' 7"	14' 6"	12' 2"	15' 7"	13' 7"	11' 6"	14' 10"	12' 11"	10' 11"	13' 11"	12' 4"	10' 5"
362S250-54	16	33	17' 10"	15' 7"	13' 2"	16' 2"	14' 2"	11' 11"	15' 0"	13' 2"	11' 1"	13' 11"	12' 4"	10' 5"	12' 11"	11' 9"	9' 11"	12' 1"	11' 3"	9' 6"
362S250-54	24	33	15' 7"	13' 7"	11' 6"	13' 11"	12' 4"	10' 5"	12' 6"	11' 6"	9' 8"	11' 4"	10' 10"	9' 1"	10' 6"	10' 3"	8' 8"	9' 10"	9' 10"	8' 3"
362S250-54	12	50	19' 7"	17' 1"	14' 5"	17' 9"	15' 6"	13' 1"	16' 6"	14' 5"	12' 2"	15' 6"	13' 7"	11' 5"	14' 9"	12' 11"	10' 10"	14' 1"	12' 4"	10' 5"
362S250-54	16	50	17' 9"	15' 6"	13' 1"	16' 2"	14' 1"	11' 11"	15' 0"	13' 1"	11' 1"	14' 1"	12' 4"	10' 5"	13' 5"	11' 8"	9' 10"	12' 10"	11' 2"	9' 5"
362S250-54	24	50	15' 6"	13' 7"	11' 5"	14' 1"	12' 4"	10' 5"	13' 1"	11' 5"	9' 8"	12' 4"	10' 9"	9' 1"	11' 8"	10' 3"	8' 7"	11' 2"	9' 9"	8' 3"
362S250-68	12	33	21' 0"	18' 5"	15' 6"	19' 1"	16' 8"	14' 1"	17' 9"	15' 6"	13' 1"	16' 8"	14' 7"	12' 4"	15' 10"	13' 10"	11' 8"	15' 2"	13' 3"	11' 2"
362S250-68	16	33	19' 1"	16' 8"	14' 1"	17' 4"	15' 2"	12' 10"	16' 1"	14' 1"	11' 11"	15' 2"	13' 3"	11' 2"	14' 5"	12' 7"	10' 7"	13' 9"	12' 0"	10' 2"
362S250-68	24	33	16' 8"	14' 7"	12' 4"	15' 2"	13' 3"	11' 2"	14' 1"	12' 4"	10' 5"	13' 3"	11' 7"	9' 9"	12' 5"	11' 0"	9' 3"	11' 8"	10' 6"	8' 10"
362S250-68	12	50	21' 0"	18' 5"	15' 6"	19' 1"	16' 8"	14' 1"	17' 9"	15' 6"	13' 1"	16' 8"	14' 7"	12' 4"	15' 10"	13' 10"	11' 8"	15' 2"	13' 3"	11' 2"
362S250-68	16	50	19' 1"	16' 8"	14' 1"	17' 4"	15' 2"	12' 10"	16' 1"	14' 1"	11' 11"	15' 2"	13' 3"	11' 2"	14' 5"	12' 7"	10' 7"	13' 9"	12' 0"	10' 2"
362S250-68	24	50	16' 8"	14' 7"	12' 4"	15' 2"	13' 3"	11' 2"	14' 1"	12' 4"	10' 5"	13' 3"	11' 7"	9' 9"	12' 7"	11' 0"	9' 3"	12' 0"	10' 6"	8' 10"
362S250-97	12	33	23' 4"	20' 4"	17' 2"	21' 2"	18' 6"	15' 7"	19' 8"	17' 2"	14' 6"	18' 6"	16' 2"	13' 8"	17' 7"	15' 4"	12' 11"	16' 10"	14' 8"	12' 5"
362S250-97	16	33	21' 2"	18' 6"	15' 7"	19' 3"	16' 10"	14' 2"	17' 10"	15' 7"	13' 2"	16' 10"	14' 8"	12' 5"	16' 0"	13' 11"	11' 9"	15' 3"	13' 4"	11' 3"
362S250-97	24	33	18' 6"	16' 2"	13' 8"	16' 10"	14' 8"	12' 5"	15' 7"	13' 8"	11' 6"	14' 8"	12' 10"	10' 10"	13' 11"	12' 2"	10' 3"	13' 4"	11' 8"	9' 10"
362S250-97	12	50	23' 4"	20' 4"	17' 2"	21' 2"	18' 6"	15' 7"	19' 8"	17' 2"	14' 6"	18' 6"	16' 2"	13' 8"	17' 7"	15' 4"	12' 11"	16' 10"	14' 8"	12' 5"
362S250-97	16	50	21' 2"	18' 6"	15' 7"	19' 3"	16' 10"	14' 2"	17' 10"	15' 7"	13' 2"	16' 10"	14' 8"	12' 5"	16' 0"	13' 11"	11' 9"	15' 3"	13' 4"	11' 3"
362S250-97	24	50	18' 6"	16' 2"	13' 8"	16' 10"	14' 8"	12' 5"	15' 7"	13' 8"	11' 6"	14' 8"	12' 10"	10' 10"	13' 11"	12' 2"	10' 3"	13' 4"	11' 8"	9' 10"
362S300-33	12	33	17' 0"	14' 11"	12' 7"	14' 8"	13' 6"	11' 5"	13' 2"	12' 7"	10' 7"	12' 0" e	11' 10" e	10' 0"	11' 1" e	11' 1" e	9' 6" e	10' 5" e	10' 5" e	9' 1" e
362S300-33	16	33	14' 8"	13' 6"	11' 5"	12' 9" e	12' 4"	10' 4"	11' 5" e	11' 5" e	9' 8"	10' 5" e	10' 5" e	9' 1" e	9' 7" e	9' 7" e	8' 7" e	9' 0" e	9' 0" e	8' 3" e
362S300-33	24	33	12' 0" e	11' 10" e	10' 0"	10' 5" e	10' 5" e	9' 1" e	9' 4" e	9' 4" e	8' 5" e	8' 6" e	8' 6" e	7' 11" e	7' 10" e	7' 10" e	7' 6" e	7' 4" e	7' 4" e	7' 2" e
362S300-43	12	33	18' 11"	16' 7"	13' 11"	17' 3"	15' 0"	12' 8"	15' 7"	13' 11"	11' 9"	14' 2"	13' 2"	11' 1"	13' 2"	12' 6"	10' 6"	12' 4"	11' 11"	10' 1"
362S300-43	16	33	17' 3"	15' 0"	12' 8"	15' 1"	13' 8"	11' 6"	13' 6"	12' 8"	10' 8"	12' 4"	11' 11"	10' 1"	11' 5"	11' 4"	9' 7"	10' 8" e	10' 8" e	9' 2"
362S300-43	24	33	14' 2"	13' 2"	11' 1"	12' 4"	11' 11"	10' 1"	11' 0"	11' 0"	9' 4"	10' 1" e	10' 1" e	8' 10"	9' 4" e	9' 4" e	8' 4" e	8' 8" e	8' 8" e	8' 0" e
362S300-54	12	33	20' 6"	17' 11"	15' 1"	18' 7"	16' 3"	13' 9"	17' 3"	15' 1"	12' 9"	16' 3"	14' 3"	12' 0"	15' 1"	13' 6"	11' 5"	14' 2"	12' 11"	10' 11"
362S300-54	16	33	18' 7"	16' 3"	13' 9"	16' 11"	14' 9"	12' 6"	15' 6"	13' 9"	11' 7"	14' 2"	12' 11"	10' 11"	13' 1"	12' 3"	10' 4"	12' 3"	11' 9"	9' 11"
362S300-54	24	33	16' 3"	14' 3"	12' 0"	14' 2"	12' 11"	10' 11"	12' 8"	12' 0"	10' 1"	11' 7"	11' 3"	9' 6"	10' 8"	10' 8"	9' 0"	10' 0"	10' 0"	8' 8"
362S300-54	12	50	20' 1"	17' 6"	14' 9"	18' 3"	15' 11"	13' 5"	16' 11"	14' 9"	12' 6"	15' 11"	13' 11"	11' 9"	15' 2"	13' 3"	11' 2"	14' 6"	12' 8"	10' 8"
362S300-54	16	50	18' 3"	15' 11"	13' 5"	16' 7"	14' 6"	12' 2"	15' 5"	13' 5"	11' 4"	14' 6"	12' 8"	10' 8"	13' 9"	12' 0"	10' 2"	13' 2"	11' 6"	9' 8"
362S300-54	24	50	15' 11"	13' 11"	11' 9"	14' 6"	12' 8"	10' 8"	13' 5"	11' 9"	9' 11"	12' 8"	11' 1"	9' 4"	12' 0"	10' 6"	8' 10"	11' 6"	10' 0"	8' 6"
362S300-68	12	33	22' 0"	19' 3"	16' 3"	20' 0"	17' 6"	14' 9"	18' 7"	16' 3"	13' 8"	17' 6"	15' 3"	12' 11"	16' 7"	14' 6"	12' 3"	15' 11"	13' 11"	11' 9"
362S300-68	16	33	20' 0"	17' 6"	14' 9"	18' 2"	15' 11"	13' 5"	16' 11"	14' 9"	12' 5"	15' 11"	13' 11"	11' 9"	15' 1"	13' 2"	11' 1"	14' 2"	12' 7"	10' 8"
362S300-68	24	33	17' 6"	15' 3"	12' 11"	15' 11"	13' 11"	11' 9"	14' 7"	12' 11"	10' 10"	13' 4"	12' 2"	10' 3"	12' 4"	11' 6"	9' 9"	11' 7"	11' 0"	9' 4"
362S300-68	12	50	21' 11"	19' 2"	16' 2"	19' 11"	17' 5"	14' 8"	18' 6"	16' 2"	13' 7"	17' 5"	15' 2"	12' 10"	16' 6"	14' 5"	12' 2"	15' 9"	13' 10"	11' 8"
362S300-68	16	50	19' 11"	17' 5"	14' 8"	18' 1"	15' 9"	13' 4"	16' 9"	14' 8"	12' 4"	15' 9"	13' 10"	11' 8"	15' 0"	13' 1"	11' 1"	14' 4"	12' 6"	10' 7"
362S300-68	24	50	17' 5"	15' 2"	12' 10"	15' 9"	13' 10"	11' 8"	14' 8"	12' 10"	10' 10"	13' 10"	12' 1"	10' 2"	13' 1"	11' 5"	9' 8"	12' 6"	10' 11"	9' 3"
362S300-97	12	33	24' 6"	21' 4"	18' 0"	22' 3"	19' 5"	16' 4"	20' 8"	18' 0"	15' 2"	19' 5"	17' 0"	14' 4"	18' 5"	16' 1"	13' 7"	17' 8"	15' 5"	13' 0"
362S300-97	16	33	22' 3"	19' 5"	16' 4"	20' 2"	17' 8"	14' 11"	18' 9"	16' 4"	13' 10"	17' 8"	15' 5"	13' 0"	16' 9"	14' 8"	12' 4"	16' 0"	14' 0"	11' 10"
362S300-97	24	33	19' 5"	17' 0"	14' 4"	17' 8"	15' 5"	13' 0"	16' 4"	14' 4"	12' 1"	15' 5"	13' 6"	11' 4"	14' 8"	12' 9"	10' 9"	14' 0"	12' 3"	10' 4"

See Curtain Wall Limiting Heights Table Notes on page 25.

Limiting Wall Heights - Curtain Wall

SFIA
STEEL FRAMING INDUSTRY ASSOCIATION

Stud Member	Spacing, in, oc	Fy, ksi	15 psf			20 psf			25 psf			30 psf			35 psf			40 psf		
			L/240	L/360	L/600	L/240	L/360	L/600	L/240	L/360	L/600	L/240	L/360	L/600	L/240	L/360	L/600	L/240	L/360	L/600
362S300-97	12	50	24' 4"	21' 3"	17' 11"	22' 2"	19' 4"	16' 4"	20' 7"	17' 11"	15' 2"	19' 4"	16' 11"	14' 3"	18' 4"	16' 1"	13' 6"	17' 7"	15' 4"	12' 11"
362S300-97	16	50	22' 2"	19' 4"	16' 4"	20' 1"	17' 7"	14' 10"	18' 8"	16' 4"	13' 9"	17' 7"	15' 4"	12' 11"	16' 8"	14' 7"	12' 4"	16' 0"	13' 11"	11' 9"
362S300-97	24	50	19' 4"	16' 11"	14' 3"	17' 7"	15' 4"	12' 11"	16' 4"	14' 3"	12' 0"	15' 4"	13' 5"	11' 4"	14' 7"	12' 9"	10' 9"	13' 11"	12' 2"	10' 3"
400S137-33	12	33	15' 1"	13' 7"	11' 6"	13' 1"	12' 4"	10' 5"	11' 8"	11' 6"	9' 8"	10' 8"	10' 8"	9' 1"	9' 10" e	9' 10" e	8' 8"	9' 3" e	9' 3" e	8' 3" e
400S137-33	16	33	13' 1"	12' 4"	10' 5"	11' 4"	11' 3"	9' 6"	10' 1" e	10' 1" e	8' 9"	9' 3" e	9' 3" e	8' 3" e	8' 7" e	8' 7" e	7' 10" e	8' 0" e	8' 0" e	7' 6" e
400S137-33	24	33	10' 8"	10' 8"	9' 1"	9' 3" e	9' 3" e	8' 3" e	8' 3" e	8' 3" e	7' 8" e	7' 6" e	7' 6" e	7' 3" e	7' 0" e	7' 0" e	6' 10" e	6' 6" e	6' 6" e	6' 6" e
400S137-43	12	33	16' 11"	14' 9"	12' 6"	15' 4"	13' 5"	11' 4"	13' 9"	12' 6"	10' 6"	12' 7"	11' 9"	9' 11"	11' 7"	11' 2"	9' 5"	10' 10"	10' 8"	9' 0"
400S137-43	16	33	15' 4"	13' 5"	11' 4"	13' 4"	12' 2"	10' 4"	11' 11"	11' 4"	9' 7"	10' 10"	10' 8"	9' 0"	10' 1"	10' 1"	8' 6"	9' 5"	9' 5"	8' 2"
400S137-43	24	33	12' 7"	11' 9"	9' 11"	10' 10"	10' 8"	9' 0"	9' 9"	9' 9"	8' 4"	8' 11"	8' 11"	7' 10"	8' 3" e	8' 3" e	7' 6"	7' 8" e	7' 8" e	7' 2" e
400S137-54	12	33	18' 1"	15' 10"	13' 4"	16' 6"	14' 5"	12' 2"	15' 3"	13' 4"	11' 3"	14' 1"	12' 7"	10' 7"	13' 1"	11' 11"	10' 1"	12' 3"	11' 5"	9' 8"
400S137-54	16	33	16' 6"	14' 5"	12' 2"	15' 0"	13' 1"	11' 0"	13' 5"	12' 2"	10' 3"	12' 3"	11' 5"	9' 8"	11' 4"	10' 10"	9' 2"	10' 7"	10' 4"	8' 9"
400S137-54	24	33	14' 1"	12' 7"	10' 7"	12' 3"	11' 5"	9' 8"	10' 11"	10' 7"	8' 11"	10' 0"	10' 0"	8' 5"	9' 3"	9' 3"	8' 0"	8' 8"	8' 8"	7' 8"
400S137-54	12	50	18' 1"	15' 10"	13' 4"	16' 6"	14' 5"	12' 2"	15' 3"	13' 4"	11' 3"	14' 5"	12' 7"	10' 7"	13' 8"	11' 11"	10' 1"	13' 1"	11' 5"	9' 8"
400S137-54	16	50	16' 6"	14' 5"	12' 2"	15' 0"	13' 1"	11' 0"	13' 11"	12' 2"	10' 3"	13' 1"	11' 5"	9' 8"	12' 5"	10' 10"	9' 2"	11' 10"	10' 4"	8' 9"
400S137-54	24	50	14' 5"	12' 7"	10' 7"	13' 1"	11' 5"	9' 8"	12' 2"	10' 7"	8' 11"	11' 5"	10' 0"	8' 5"	10' 10"	9' 6"	8' 0"	10' 4"	9' 1"	7' 8"
400S137-68	12	33	19' 5"	16' 11"	14' 3"	17' 7"	15' 5"	13' 0"	16' 4"	14' 3"	12' 0"	15' 5"	13' 5"	11' 4"	14' 7"	12' 9"	10' 9"	13' 8"	12' 2"	10' 4"
400S137-68	16	33	17' 7"	15' 5"	13' 0"	16' 0"	14' 0"	11' 9"	14' 10"	13' 0"	10' 11"	13' 8"	12' 2"	10' 4"	12' 8"	11' 7"	9' 9"	11' 10"	11' 1"	9' 4"
400S137-68	24	33	15' 5"	13' 5"	11' 4"	13' 8"	12' 2"	10' 4"	12' 3"	11' 4"	9' 7"	11' 2"	10' 8"	9' 0"	10' 4"	10' 2"	8' 7"	9' 8"	9' 8"	8' 2"
400S137-68	12	50	19' 5"	16' 11"	14' 3"	17' 7"	15' 5"	13' 0"	16' 4"	14' 3"	12' 0"	15' 5"	13' 5"	11' 4"	14' 7"	12' 9"	10' 9"	14' 0"	12' 2"	10' 4"
400S137-68	16	50	17' 7"	15' 5"	13' 0"	16' 0"	14' 0"	11' 9"	14' 10"	13' 0"	10' 11"	14' 0"	12' 2"	10' 4"	13' 3"	11' 7"	9' 9"	12' 8"	11' 1"	9' 4"
400S137-68	24	50	15' 5"	13' 5"	11' 4"	14' 0"	12' 2"	10' 4"	13' 0"	11' 4"	9' 7"	12' 2"	10' 8"	9' 0"	11' 7"	10' 2"	8' 7"	11' 1"	9' 8"	8' 2"
400S162-33	12	33	16' 2"	14' 3"	12' 0"	14' 0"	12' 11"	10' 11"	12' 7"	12' 0"	10' 1"	11' 5" e	11' 4" e	9' 6"	10' 7" e	10' 7" e	9' 1"	9' 11" e	9' 11" e	8' 8" e
400S162-33	16	33	14' 0"	12' 11"	10' 11"	12' 2"	11' 9"	9' 11"	10' 10" e	10' 10" e	9' 2"	9' 11" e	9' 11" e	8' 8" e	9' 2" e	9' 2" e	8' 3" e	8' 7" e	8' 7" e	7' 10" e
400S162-33	24	33	11' 5" e	11' 4" e	9' 6"	9' 11" e	9' 11" e	8' 8" e	8' 10" e	8' 10" e	8' 0" e	8' 1" e	8' 1" e	7' 7" e	7' 6" e	7' 6" e	7' 2" e	7' 0" e	7' 0" e	6' 10" e
400S162-43	12	33	17' 9"	15' 6"	13' 1"	16' 1"	14' 1"	11' 10"	14' 10"	13' 1"	11' 0"	13' 6"	12' 3"	10' 4"	12' 6"	11' 8"	9' 10"	11' 9"	11' 2"	9' 5"
400S162-43	16	33	16' 1"	14' 1"	11' 10"	14' 4"	12' 9"	10' 9"	12' 10"	11' 10"	10' 0"	11' 9"	11' 2"	9' 5"	10' 10"	10' 7"	8' 11"	10' 2"	10' 2"	8' 7"
400S162-43	24	33	13' 6"	12' 3"	10' 4"	11' 9"	11' 2"	9' 5"	10' 6"	10' 4"	8' 9"	9' 7" e	9' 7" e	8' 3"	8' 10" e	8' 10" e	7' 10"	8' 3" e	8' 3" e	7' 6" e
400S162-54	12	33	19' 0"	16' 7"	14' 0"	17' 3"	15' 1"	12' 9"	16' 0"	14' 0"	11' 10"	15' 1"	13' 2"	11' 1"	14' 1"	12' 6"	10' 7"	13' 2"	12' 0"	10' 1"
400S162-54	16	33	17' 3"	15' 1"	12' 9"	15' 8"	13' 8"	11' 7"	14' 5"	12' 9"	10' 9"	13' 2"	12' 0"	10' 1"	12' 2"	11' 4"	9' 7"	11' 5"	10' 10"	9' 2"
400S162-54	24	33	15' 1"	13' 2"	11' 1"	13' 2"	12' 0"	10' 1"	11' 9"	11' 1"	9' 4"	10' 9"	10' 5"	8' 10"	9' 11"	9' 11"	8' 5"	9' 4"	9' 4"	8' 0"
400S162-54	12	50	19' 0"	16' 7"	14' 0"	17' 3"	15' 1"	12' 9"	16' 0"	14' 0"	11' 10"	15' 1"	13' 2"	11' 1"	14' 4"	12' 6"	10' 7"	13' 8"	12' 0"	10' 1"
400S162-54	16	50	17' 3"	15' 1"	12' 9"	15' 8"	13' 8"	11' 7"	14' 7"	12' 9"	10' 9"	13' 8"	12' 0"	10' 1"	13' 0"	11' 4"	9' 7"	12' 5"	10' 10"	9' 2"
400S162-54	24	50	15' 1"	13' 2"	11' 1"	13' 8"	12' 0"	10' 1"	12' 9"	11' 1"	9' 4"	12' 0"	10' 5"	8' 10"	11' 4"	9' 11"	8' 5"	10' 10"	9' 6"	8' 0"
400S162-68	12	33	20' 4"	17' 9"	15' 0"	18' 6"	16' 2"	13' 7"	17' 2"	15' 0"	12' 8"	16' 2"	14' 1"	11' 11"	15' 4"	13' 5"	11' 4"	14' 8"	12' 10"	10' 10"
400S162-68	16	33	18' 6"	16' 2"	13' 7"	16' 9"	14' 8"	12' 4"	15' 7"	13' 7"	11' 6"	14' 8"	12' 10"	10' 10"	13' 8"	12' 2"	10' 3"	12' 9"	11' 8"	9' 10"
400S162-68	24	33	16' 2"	14' 1"	11' 11"	14' 8"	12' 10"	10' 10"	13' 2"	11' 11"	10' 0"	12' 0"	11' 2"	9' 5"	11' 2"	10' 8"	9' 0"	10' 5"	10' 2"	8' 7"
400S162-68	12	50	20' 4"	17' 9"	15' 0"	18' 6"	16' 2"	13' 7"	17' 2"	15' 0"	12' 8"	16' 2"	14' 1"	11' 11"	15' 4"	13' 5"	11' 4"	14' 8"	12' 10"	10' 10"
400S162-68	16	50	18' 6"	16' 2"	13' 7"	16' 9"	14' 8"	12' 4"	15' 7"	13' 7"	11' 6"	14' 8"	12' 10"	10' 10"	13' 11"	12' 2"	10' 3"	13' 4"	11' 8"	9' 10"
400S162-68	24	50	16' 2"	14' 1"	11' 11"	14' 8"	12' 10"	10' 10"	13' 7"	11' 11"	10' 0"	12' 10"	11' 2"	9' 5"	12' 2"	10' 8"	9' 0"	11' 8"	10' 2"	8' 7"
400S162-97	12	33	22' 5"	19' 7"	16' 7"	20' 5"	17' 10"	15' 0"	18' 11"	16' 7"	13' 11"	17' 10"	15' 7"	13' 2"	16' 11"	14' 9"	12' 6"	16' 2"	14' 2"	11' 11"
400S162-97	16	33	20' 5"	17' 10"	15' 0"	18' 6"	16' 2"	13' 8"	17' 2"	15' 0"	12' 8"	16' 2"	14' 2"	11' 11"	15' 5"	13' 5"	11' 4"	14' 9"	12' 10"	10' 10"
400S162-97	24	33	17' 10"	15' 7"	13' 2"	16' 2"	14' 2"	11' 11"	15' 0"	13' 2"	11' 1"	14' 1"	12' 4"	10' 5"	13' 1"	11' 9"	9' 11"	12' 3"	11' 3"	9' 6"
400S162-97	12	50	22' 5"	19' 7"	16' 7"	20' 5"	17' 10"	15' 0"	18' 11"	16' 7"	13' 11"	17' 10"	15' 7"	13' 2"	16' 11"	14' 9"	12' 6"	16' 2"	14' 2"	11' 11"
400S162-97	16	50	20' 5"	17' 10"	15' 0"	18' 6"	16' 2"	13' 8"	17' 2"	15' 0"	12' 8"	16' 2"	14' 2"	11' 11"	15' 5"	13' 5"	11' 4"	14' 9"	12' 10"	10' 10"
400S162-97	24	50	17' 10"	15' 7"	13' 2"	16' 2"	14' 2"	11' 11"	15' 0"	13' 2"	11' 1"	14' 2"	12' 4"	10' 5"	13' 5"	11' 9"	9' 11"	12' 10"	11' 3"	9' 6"
400S200-33	12	33	17' 0"	15' 0"	12' 7"	14' 9"	13' 7"	11' 6"	13' 2" e	12' 7"	10' 8"	12' 0" e	11' 10" e	10' 0"	11' 1" e	11' 1" e	9' 6" e	10' 5" e	10' 5" e	9' 1" e
400S200-33	16	33	14' 9"	13' 7"	11' 6"	12' 9" e	12' 4" e	10' 5"	11' 5" e	11' 5" e	9' 8"	10' 5" e	10' 5" e	9' 1" e	9' 8" e	9' 8" e	8' 8" e	9' 0" e	9' 0" e	8' 3" e
400S200-33	24	33	12' 0" e	11' 10" e	10' 0"	10' 5" e	10' 5" e	9' 1" e	9' 4" e	9' 4" e	8' 5" e	8' 6" e	8' 6" e	7' 11" e	7' 10" e	7' 10" e	7' 7" e	7' 4" e	7' 4" e	7' 3" e
400S200-43	12	33	18' 8"	16' 4"	13' 9"	17' 0"	14' 10"	12' 6"	15' 9"	13' 9"	11' 7"	14' 6"	13' 0"	10' 11"	13' 5"	12' 4"	10' 5"	12' 7"	11' 9"	9' 11"
400S200-43	16	33	17' 0"	14' 10"	12' 6"	15' 4"	13' 6"	11' 4"	13' 9"	12' 6"	10' 7"	12' 7"	11' 9"	9' 11"	11' 7"	11' 2"	9' 5"	10' 10" e	10' 8" e	9' 0"
400S200-43	24	33	14' 6"	13' 0"	10' 11"	12' 7"	11' 9"	9' 11"	11' 3" e	10' 11"	9' 3"	10' 3" e	10' 3" e	8' 8"	9' 6" e	9' 6" e	8' 3" e	8' 11" e	8' 11" e	7' 11" e
400S200-54	12	33	20' 1"	17' 6"	14' 9"	18' 3"	15' 11"	13' 5"	16' 11"	14' 9"	12' 6"	15' 11"	13' 11"	11' 9"	15' 1"	13' 3"	11' 2"	14' 4"	12' 8"	10' 8"
400S200-54	16	33	18' 3"	15' 11"	13' 5"	16' 7"	14' 6"	12' 2"	15' 4"	13' 5"	11' 4"	14' 4"	12' 8"	10' 8"	13' 3"	12' 0"	10' 1"	12' 5"	11' 6"	9' 8"
400S200-54	24	33	15' 11"	13' 11"	11' 9"	14' 4"	12' 8"	10' 8"	12' 10"	11' 9"	9' 11"	11' 8"	11' 0"	9' 4"	10' 10"	10' 6"	8' 10"	10' 2"	10' 0"	8' 5"
400S200-54	12	50	20' 1"	17' 6"	14' 9"	18' 3"	15' 11"	13' 5"	16' 11"	14' 9"	12' 6"	15' 11"	13' 11"	11' 9"	15' 1"	13' 3"	11' 2"	14' 6"	12' 8"	10' 8"
400S200-54	16	50	18' 3"	15' 11"	13' 5"	16' 7"	14' 6"	12' 2"	15' 4"	13' 5"	11' 4"	14' 6"	12' 8"	10' 8"	13' 9"	12' 0"	10' 1"	13' 2"	11' 6"	9' 8"
400S200-54	24	50	15' 11"	13' 11"	11' 9"	14' 6"	12' 8"	10' 8"	13' 5"	11' 9"	9' 11"	12' 8"	11' 0"	9' 4"	12' 0"	10' 6"	8' 10"	11' 6"	10' 0"	8' 5"
400S200-68	12	33	21' 6"	18' 9"	15' 10"	19' 6"	17' 1"	14' 5"	18' 1"	15' 10"	13' 4"	17' 1"	14' 11"	12' 7"	16' 2"	14' 2"	11' 11"	15' 6"	13' 6"	11' 5"
400S200-68	16	33	19' 6"	17' 1"	14' 5"	17' 9"	15' 6"	13' 1"	16' 6"	14' 5"	12' 2"	15' 6"	13' 6"	11' 5"	14' 9"	12' 10"	10' 10"	13' 11"	12' 4"	10' 4"
400S200-68	24	33	17' 1"	14' 11"	12' 7"	15' 6"	13' 6"	11' 5"	14' 4"	12' 7"	10' 7"	13' 1"	11' 10"	10' 0"	12' 1"	11' 3"	9' 6"	11' 4"	10' 9"	9' 1"
400S200-68	12	50	21' 6"	18' 9"	15' 10"	19' 6"	17' 1"	14' 5"	18' 1"	15' 10"	13' 4"	17' 1"	14' 11"	12' 7"	16' 2"	14' 2"	11' 11"	15' 6"	13' 6"	11' 5"
400S200-68	16	50	19' 6"	17' 1"	14' 5"	17' 9"	15' 6"	13' 1"	16' 6"	14' 5"	12' 2"	15' 6"	13' 6"	11' 5"	14' 9"	12' 10"	10' 10"	14' 1"	12' 4"	10' 4"
400S200-68	24	50	17' 1"	14' 11"	12' 7"	15' 6"	13' 6"	11' 5"	14' 5"	12' 7"	10' 7"	13' 6"	11' 10"	10' 0"	12' 10"	11' 3"	9' 6"	12' 4"	10' 9"	9' 1"
400S200-97	12	33	23' 9"	20' 9"	17' 6"	21' 7"	18' 11"	15' 11"	20' 1"	17' 6"	14' 9"	18' 11"	16' 6"	13' 11"	17' 11"	15' 8"	13' 3"	17' 2"	15' 0"	12' 8"
400S200-97	16	33	21' 7"	18' 11"	15' 11"	19' 8"	17' 2"	14' 6"	18' 3"	15' 11"	13' 5"	17' 2"	15' 0"	12' 8"	16' 4"	14' 3"	12' 0"	15' 7"	13' 7"	11' 6"
400S200-97	24	33	18' 11"	16' 6"	13' 11"	17' 2"	15' 0"	12' 8"	15' 11"	13' 11"	11' 9"	15' 0"	13' 1"	11' 0"	14' 3"	12' 5"	10' 6"	13' 4"	11' 11"	10' 0"

See Curtain Wall Limiting Heights Table Notes on page 25.

Limiting Wall Heights - Curtain Wall

SFIA
STEEL FRAMING INDUSTRY ASSOCIATION

Stud Member	Spacing, in, oc	Fy, ksi	15 psf			20 psf			25 psf			30 psf			35 psf			40 psf		
			L/240	L/360	L/600	L/240	L/360	L/600	L/240	L/360	L/600	L/240	L/360	L/600	L/240	L/360	L/600	L/240	L/360	L/600
400S200-97	12	50	23' 9"	20' 9"	17' 6"	21' 7"	18' 11"	15' 11"	20' 1"	17' 6"	14' 9"	18' 11"	16' 6"	13' 11"	17' 11"	15' 8"	13' 3"	17' 2"	15' 0"	12' 8"
400S200-97	16	50	21' 7"	18' 11"	15' 11"	19' 8"	17' 2"	14' 6"	18' 3"	15' 11"	13' 5"	17' 2"	15' 0"	12' 8"	16' 4"	14' 3"	12' 0"	15' 7"	13' 7"	11' 6"
400S200-97	24	50	18' 11"	16' 6"	13' 11"	17' 2"	15' 0"	12' 8"	15' 11"	13' 11"	11' 9"	15' 0"	13' 1"	11' 0"	14' 3"	12' 5"	10' 6"	13' 7"	11' 11"	10' 0"
400S250-33	12	33	17' 10"	15' 7"	13' 1"	15' 5"	14' 2"	11' 11"	13' 10" e	13' 1" e	11' 1"	12' 7" e	12' 4" e	10' 5"	11' 8" e	11' 8" e	9' 11" e	10' 11" e	10' 11" e	9' 6" e
400S250-33	16	33	15' 5"	14' 2"	11' 11"	13' 4" e	12' 10" e	10' 10"	11' 11" e	11' 11" e	10' 1" e	10' 11" e	10' 11" e	9' 6" e	10' 1" e	10' 1" e	9' 0" e	9' 5" e	9' 5" e	8' 7" e
400S250-33	24	33	12' 7" e	12' 4" e	10' 5"	10' 11" e	10' 11" e	9' 6" e	9' 9" e	9' 9" e	8' 9" e	8' 11" e	8' 11" e	8' 3" e	8' 3" e	8' 3" e	7' 10" e	7' 9" e	7' 9" e	7' 6" e
400S250-43	12	33	19' 8"	17' 2"	14' 6"	17' 11"	15' 8"	13' 2"	16' 6"	14' 6"	12' 3"	15' 0"	13' 8"	11' 6"	13' 11"	13' 0"	10' 11"	13' 0"	12' 5"	10' 6"
400S250-43	16	33	17' 11"	15' 8"	13' 2"	15' 11"	14' 2"	12' 0"	14' 3"	13' 2"	11' 1"	13' 0"	12' 5"	10' 6"	12' 1" e	11' 9" e	9' 11"	11' 3" e	11' 3" e	9' 6"
400S250-43	24	33	15' 0"	13' 8"	11' 6"	13' 0"	12' 5"	10' 6"	11' 8" e	11' 6" e	9' 9"	10' 8" e	10' 8" e	9' 2" e	9' 10" e	9' 10" e	8' 8" e	9' 2" e	9' 2" e	8' 4" e
400S250-54	12	33	21' 2"	18' 6"	15' 7"	19' 2"	16' 9"	14' 2"	17' 10"	15' 7"	13' 2"	16' 9"	14' 8"	12' 4"	15' 10"	13' 11"	11' 9"	14' 10"	13' 4"	11' 3"
400S250-54	16	33	19' 2"	16' 9"	14' 2"	17' 5"	15' 3"	12' 10"	16' 2"	14' 2"	11' 11"	14' 10"	13' 4"	11' 3"	13' 8"	12' 8"	10' 8"	12' 10"	12' 1"	10' 2"
400S250-54	24	33	16' 9"	14' 8"	12' 4"	14' 10"	13' 4"	11' 3"	13' 3"	12' 4"	10' 5"	12' 1"	11' 8"	9' 10"	11' 2"	11' 1"	9' 4"	10' 6" e	10' 6" e	8' 11"
400S250-54	12	50	21' 1"	18' 5"	15' 6"	19' 2"	16' 9"	14' 1"	17' 9"	15' 6"	13' 1"	16' 9"	14' 7"	12' 4"	15' 11"	13' 10"	11' 8"	15' 2"	13' 3"	11' 2"
400S250-54	16	50	19' 2"	16' 9"	14' 1"	17' 5"	15' 2"	12' 10"	16' 2"	14' 1"	11' 11"	15' 2"	13' 3"	11' 2"	14' 5"	12' 7"	10' 8"	13' 10"	12' 1"	10' 2"
400S250-54	24	50	16' 9"	14' 7"	12' 4"	15' 2"	13' 3"	11' 2"	14' 1"	12' 4"	10' 5"	13' 3"	11' 7"	9' 9"	12' 7"	11' 0"	9' 3"	12' 1"	10' 6"	8' 11"
400S250-68	12	33	22' 8"	19' 10"	16' 8"	20' 7"	18' 0"	15' 2"	19' 1"	16' 8"	14' 1"	18' 0"	15' 9"	13' 3"	17' 1"	14' 11"	12' 7"	16' 4"	14' 3"	12' 1"
400S250-68	16	33	20' 7"	18' 0"	15' 2"	18' 9"	16' 4"	13' 9"	17' 4"	15' 2"	12' 10"	16' 4"	14' 3"	12' 1"	15' 6"	13' 7"	11' 5"	14' 10"	13' 0"	10' 11"
400S250-68	24	33	18' 0"	15' 9"	13' 3"	16' 4"	14' 3"	12' 1"	15' 2"	13' 3"	11' 2"	14' 3"	12' 6"	10' 6"	13' 3"	11' 10"	10' 0"	12' 5"	11' 4"	9' 7"
400S250-68	12	50	22' 8"	19' 10"	16' 8"	20' 7"	18' 0"	15' 2"	19' 1"	16' 8"	14' 1"	18' 0"	15' 9"	13' 3"	17' 1"	14' 11"	12' 7"	16' 4"	14' 3"	12' 1"
400S250-68	16	50	20' 7"	18' 0"	15' 2"	18' 9"	16' 4"	13' 9"	17' 4"	15' 2"	12' 10"	16' 4"	14' 3"	12' 1"	15' 6"	13' 7"	11' 5"	14' 10"	13' 0"	10' 11"
400S250-68	24	50	18' 0"	15' 9"	13' 3"	16' 4"	14' 3"	12' 1"	15' 2"	13' 3"	11' 2"	14' 3"	12' 6"	10' 6"	13' 7"	11' 10"	10' 0"	13' 0"	11' 4"	9' 7"
400S250-97	12	33	25' 2"	21' 11"	18' 6"	22' 10"	19' 11"	16' 10"	21' 2"	18' 6"	15' 7"	19' 11"	17' 5"	14' 8"	18' 11"	16' 7"	14' 0"	18' 1"	15' 10"	13' 4"
400S250-97	16	33	22' 10"	19' 11"	16' 10"	20' 9"	18' 1"	15' 3"	19' 3"	16' 10"	14' 2"	18' 1"	15' 10"	13' 4"	17' 3"	15' 0"	12' 8"	16' 6"	14' 5"	12' 2"
400S250-97	24	33	19' 11"	17' 5"	14' 8"	18' 1"	15' 10"	13' 4"	16' 10"	14' 8"	12' 5"	15' 10"	13' 10"	11' 8"	15' 0"	13' 2"	11' 1"	14' 5"	12' 7"	10' 7"
400S250-97	12	50	25' 2"	21' 11"	18' 6"	22' 10"	19' 11"	16' 10"	21' 2"	18' 6"	15' 7"	19' 11"	17' 5"	14' 8"	18' 11"	16' 7"	14' 0"	18' 1"	15' 10"	13' 4"
400S250-97	16	50	22' 10"	19' 11"	16' 10"	20' 9"	18' 1"	15' 3"	19' 3"	16' 10"	14' 2"	18' 1"	15' 10"	13' 4"	17' 3"	15' 0"	12' 8"	16' 6"	14' 5"	12' 2"
400S250-97	24	50	19' 11"	17' 5"	14' 8"	18' 1"	15' 10"	13' 4"	16' 10"	14' 8"	12' 5"	15' 10"	13' 10"	11' 8"	15' 0"	13' 2"	11' 1"	14' 5"	12' 7"	10' 7"
400S300-33	12	33	17' 11"	16' 0"	13' 6"	15' 6"	14' 7"	12' 3"	13' 11" e	13' 6" e	11' 5"	12' 8" e	12' 8" e	10' 9"	11' 9" e	11' 9" e	10' 2" e	11' 0" e	11' 0" e	9' 9" e
400S300-33	16	33	15' 6"	14' 7"	12' 3"	13' 5" e	13' 3" e	11' 2"	12' 0" e	12' 0" e	10' 4" e	11' 0" e	11' 0" e	9' 9" e	10' 2" e	10' 2" e	9' 3" e	9' 6" e	9' 6" e	8' 10" e
400S300-33	24	33	12' 8" e	12' 8" e	10' 9"	11' 0" e	11' 0" e	9' 9" e	9' 10" e	9' 10" e	9' 1" e	9' 0" e	9' 0" e	8' 6" e	8' 4" e	8' 4" e	8' 1" e	7' 9" e	7' 9" e	7' 9" e
400S300-43	12	33	20' 4"	17' 10"	15' 0"	18' 5"	16' 2"	13' 8"	16' 5"	15' 0"	12' 8"	15' 0"	14' 2"	11' 11"	13' 11"	13' 5"	11' 4"	13' 0"	12' 10"	10' 10"
400S300-43	16	33	18' 5"	16' 2"	13' 8"	15' 11"	14' 8"	12' 5"	14' 3"	13' 8"	11' 6"	13' 0"	12' 10"	10' 10"	12' 0" e	12' 0" e	10' 3"	11' 3" e	11' 3" e	9' 10"
400S300-43	24	33	15' 0"	14' 2"	11' 11"	13' 0"	12' 10"	10' 10"	11' 8" e	11' 8" e	10' 1"	10' 7" e	10' 7" e	9' 5" e	9' 10" e	9' 10" e	9' 0" e	9' 2" e	9' 2" e	8' 7" e
400S300-54	12	33	22' 1"	19' 3"	16' 3"	20' 0"	17' 6"	14' 9"	18' 7"	16' 3"	13' 8"	17' 3"	15' 3"	12' 11"	16' 0"	14' 6"	12' 3"	15' 0"	13' 11"	11' 9"
400S300-54	16	33	20' 0"	17' 6"	14' 9"	18' 2"	15' 11"	13' 5"	16' 5"	14' 9"	12' 5"	15' 0"	13' 11"	11' 9"	13' 10"	13' 2"	11' 2"	13' 0"	12' 7"	10' 8"
400S300-54	24	33	17' 3"	15' 3"	12' 11"	15' 0"	13' 11"	11' 9"	13' 5"	12' 11"	10' 11"	12' 3"	12' 2"	10' 3"	11' 4"	11' 4"	9' 9"	10' 7" e	10' 7" e	9' 4"
400S300-54	12	50	21' 7"	18' 10"	15' 11"	19' 7"	17' 2"	14' 5"	18' 3"	15' 11"	13' 5"	17' 2"	15' 0"	12' 8"	16' 3"	14' 3"	12' 0"	15' 7"	13' 7"	11' 6"
400S300-54	16	50	19' 7"	17' 2"	14' 5"	17' 10"	15' 7"	13' 2"	16' 7"	14' 5"	12' 2"	15' 7"	13' 7"	11' 6"	14' 9"	12' 11"	10' 11"	14' 2"	12' 4"	10' 5"
400S300-54	24	50	17' 2"	15' 0"	12' 8"	15' 7"	13' 7"	11' 6"	14' 5"	12' 8"	10' 8"	13' 7"	11' 11"	10' 0"	12' 11"	11' 3"	9' 6"	12' 2"	10' 10"	9' 1"
400S300-68	12	33	23' 9"	20' 9"	17' 6"	21' 7"	18' 10"	15' 11"	20' 0"	17' 6"	14' 9"	18' 10"	16' 5"	13' 10"	17' 11"	15' 7"	13' 2"	17' 1"	14' 11"	12' 7"
400S300-68	16	33	21' 7"	18' 10"	15' 11"	19' 7"	17' 1"	14' 5"	18' 2"	15' 11"	13' 5"	17' 1"	14' 11"	12' 7"	16' 1"	14' 2"	12' 0"	15' 0"	13' 7"	11' 5"
400S300-68	24	33	18' 10"	16' 5"	13' 10"	17' 1"	14' 11"	12' 7"	15' 6"	13' 10"	11' 8"	14' 2"	13' 1"	11' 0"	13' 1"	12' 5"	10' 6"	12' 3"	11' 10"	10' 0"
400S300-68	12	50	23' 7"	20' 7"	17' 4"	21' 5"	18' 8"	15' 9"	19' 10"	17' 4"	14' 8"	18' 8"	16' 4"	13' 9"	17' 9"	15' 6"	13' 1"	17' 0"	14' 10"	12' 6"
400S300-68	16	50	21' 5"	18' 8"	15' 9"	19' 5"	17' 0"	14' 4"	18' 1"	15' 9"	13' 4"	17' 0"	14' 10"	12' 6"	16' 2"	14' 1"	11' 11"	15' 5"	13' 6"	11' 4"
400S300-68	24	50	18' 8"	16' 4"	13' 9"	17' 0"	14' 10"	12' 6"	15' 9"	13' 9"	11' 7"	14' 10"	13' 0"	10' 11"	14' 1"	12' 4"	10' 5"	13' 6"	11' 9"	9' 11"
400S300-97	12	33	26' 4"	23' 0"	19' 5"	23' 11"	20' 11"	17' 8"	22' 3"	19' 5"	16' 4"	20' 11"	18' 3"	15' 5"	19' 10"	17' 4"	14' 8"	19' 0"	16' 7"	14' 0"
400S300-97	16	33	23' 11"	20' 11"	17' 8"	21' 9"	19' 0"	16' 0"	20' 2"	17' 8"	14' 10"	19' 0"	16' 7"	14' 0"	18' 1"	15' 9"	13' 4"	17' 3"	15' 1"	12' 9"
400S300-97	24	33	20' 11"	18' 3"	15' 5"	19' 0"	16' 7"	14' 0"	17' 8"	15' 5"	13' 0"	16' 7"	14' 6"	12' 3"	15' 9"	13' 9"	11' 7"	15' 1"	13' 2"	11' 1"
400S300-97	12	50	26' 3"	22' 11"	19' 4"	23' 10"	20' 10"	17' 7"	22' 2"	19' 4"	16' 4"	20' 10"	18' 2"	15' 4"	19' 9"	17' 3"	14' 7"	18' 11"	16' 6"	13' 11"
400S300-97	16	50	23' 10"	20' 10"	17' 7"	21' 8"	18' 11"	16' 0"	20' 1"	17' 7"	14' 10"	18' 11"	16' 6"	13' 11"	18' 0"	15' 8"	13' 3"	17' 2"	15' 0"	12' 8"
400S300-97	24	50	20' 10"	18' 2"	15' 4"	18' 11"	16' 6"	13' 11"	17' 7"	15' 4"	12' 11"	16' 6"	14' 5"	12' 2"	15' 8"	13' 9"	11' 7"	15' 0"	13' 1"	11' 1"
550S162-33	12	33	19' 7"	18' 3"	15' 5"	17' 0" e	16' 7" e	14' 0"	15' 2" e	15' 2" e	13' 0" e	13' 10" e	13' 10" e	12' 3" e	12' 10" e	12' 10" e	11' 7" e	12' 0" e	12' 0" e	11' 1" e
550S162-33	16	33	17' 0" e	16' 7" e	14' 0"	14' 8" e	14' 8" e	12' 8" e	13' 2" e	13' 2" e	11' 9" e	12' 0" e	12' 0" e	11' 1" e	11' 1" e	11' 1" e	10' 6" e	10' 5" e	10' 5" e	10' 1" e
550S162-33	24	33	13' 10" e	13' 10" e	12' 3" e	12' 0" e	12' 0" e	11' 1" e	10' 9" e	10' 9" e	10' 4" e	9' 10" e	9' 10" e	9' 8" e	9' 1" e	9' 1" e	9' 1" e	8' 6" e	8' 6" e	8' 6" e
550S162-43	12	33	22' 9"	19' 10"	16' 9"	20' 8"	18' 1"	15' 3"	18' 9"	16' 9"	14' 2"	17' 1"	15' 9"	13' 4"	15' 10" e	15' 0"	12' 8"	14' 10" e	14' 4" e	12' 1"
550S162-43	16	33	20' 8"	18' 1"	15' 3"	18' 2"	16' 5"	13' 10"	16' 3" e	15' 3"	12' 10"	14' 10" e	14' 4" e	12' 1"	13' 8" e	13' 7" e	11' 6" e	12' 10" e	12' 10" e	11' 0" e
550S162-43	24	33	17' 1"	15' 9"	13' 4"	14' 10" e	14' 4" e	12' 1"	13' 3" e	13' 3" e	11' 3" e	12' 1" e	12' 1" e	10' 7" e	11' 2" e	11' 2" e	10' 0" e	10' 6" e	10' 6" e	9' 7" e
550S162-54	12	33	24' 5"	21' 4"	18' 0"	22' 2"	19' 4"	16' 4"	20' 7"	18' 0"	15' 2"	19' 4"	16' 11"	14' 3"	18' 5"	16' 1"	13' 7"	17' 3"	15' 4"	13' 0"
550S162-54	16	33	22' 2"	19' 4"	16' 4"	20' 2"	17' 7"	14' 10"	18' 8"	16' 4"	13' 9"	17' 3"	15' 4"	13' 0"	16' 0"	14' 7"	12' 4"	14' 11"	14' 0"	11' 9"
550S162-54	24	33	19' 4"	16' 11"	14' 3"	17' 3"	15' 4"	13' 0"	15' 5"	14' 3"	12' 0"	14' 1" e	13' 5" e	11' 4"	13' 1" e	12' 9" e	10' 9"	12' 2" e	12' 2" e	10' 3" e
550S162-54	12	50	24' 5"	21' 4"	18' 0"	22' 2"	19' 4"	16' 4"	20' 7"	18' 0"	15' 2"	19' 4"	16' 11"	14' 3"	18' 5"	16' 1"	13' 7"	17' 7"	15' 4"	13' 0"
550S162-54	16	50	22' 2"	19' 4"	16' 4"	20' 2"	17' 7"	14' 10"	18' 8"	16' 4"	13' 9"	17' 7"	15' 4"	13' 0"	16' 9"	14' 7"	12' 4"	16' 0"	14' 0"	11' 9"
550S162-54	24	50	19' 4"	16' 11"	14' 3"	17' 7"	15' 4"	13' 0"	16' 4"	14' 3"	12' 0"	15' 4"	13' 5"	11' 4"	14' 7"	12' 9"	10' 9"	14' 0"	12' 2"	10' 3"
550S162-68	12	33	26' 2"	22' 10"	19' 3"	23' 9"	20' 9"	17' 6"	22' 1"	19' 3"	16' 3"	20' 9"	18' 2"	15' 3"	19' 9"	17' 3"	14' 6"	18' 10"	16' 6"	13' 11"
550S162-68	16	33	23' 9"	20' 9"	17' 6"	21' 7"	18' 10"	15' 11"	20' 0"	17' 6"	14' 9"	18' 10"	16' 6"	13' 11"	17' 11"	15' 8"	13' 2"	17' 2"	15' 0"	12' 7"
550S162-68	24	33	20' 9"	18' 2"	15' 3"	18' 10"	16' 6"	13' 11"	17' 6"	15' 3"	12' 11"	16' 3"	14' 5"	12' 2"	15' 0"	13' 8"	11' 6"	14' 1"	13' 1"	11' 0"

See Curtain Wall Limiting Heights Table Notes on page 25.

Limiting Wall Heights - Curtain Wall

SFIA
STEEL FRAMING INDUSTRY ASSOCIATION

Stud Member	Spacing, in, oc	Fy, ksi	15 psf			20 psf			25 psf			30 psf			35 psf			40 psf		
			L/240	L/360	L/600	L/240	L/360	L/600	L/240	L/360	L/600	L/240	L/360	L/600	L/240	L/360	L/600	L/240	L/360	L/600
550S162-68	12	50	26' 2"	22' 10"	19' 3"	23' 9"	20' 9"	17' 6"	22' 1"	19' 3"	16' 3"	20' 9"	18' 2"	15' 3"	19' 9"	17' 3"	14' 6"	18' 10"	16' 6"	13' 11"
550S162-68	16	50	23' 9"	20' 9"	17' 6"	21' 7"	18' 10"	15' 11"	20' 0"	17' 6"	14' 9"	18' 10"	16' 6"	13' 11"	17' 11"	15' 8"	13' 2"	17' 2"	15' 0"	12' 7"
550S162-68	24	50	20' 9"	18' 2"	15' 3"	18' 10"	16' 6"	13' 11"	17' 6"	15' 3"	12' 11"	16' 6"	14' 5"	12' 2"	15' 8"	13' 8"	11' 6"	15' 0"	13' 1"	11' 0"
550S162-97	12	33	28' 11"	25' 3"	21' 4"	26' 4"	23' 0"	19' 5"	24' 5"	21' 4"	18' 0"	23' 0"	20' 1"	16' 11"	21' 10"	19' 1"	16' 1"	20' 11"	18' 3"	15' 5"
550S162-97	16	33	26' 4"	23' 0"	19' 5"	23' 11"	20' 11"	17' 7"	22' 2"	19' 5"	16' 4"	20' 11"	18' 3"	15' 5"	19' 10"	17' 4"	14' 7"	19' 0"	16' 7"	14' 0"
550S162-97	24	33	23' 0"	20' 1"	16' 11"	20' 11"	18' 3"	15' 5"	19' 5"	16' 11"	14' 3"	18' 3"	15' 11"	13' 5"	17' 4"	15' 2"	12' 9"	16' 7"	14' 6"	12' 3"
550S162-97	12	50	28' 11"	25' 3"	21' 4"	26' 4"	23' 0"	19' 5"	24' 5"	21' 4"	18' 0"	23' 0"	20' 1"	16' 11"	21' 10"	19' 1"	16' 1"	20' 11"	18' 3"	15' 5"
550S162-97	16	50	26' 4"	23' 0"	19' 5"	23' 11"	20' 11"	17' 7"	22' 2"	19' 5"	16' 4"	20' 11"	18' 3"	15' 5"	19' 10"	17' 4"	14' 7"	19' 0"	16' 7"	14' 0"
550S162-97	24	50	23' 0"	20' 1"	16' 11"	20' 11"	18' 3"	15' 5"	19' 5"	16' 11"	14' 3"	18' 3"	15' 11"	13' 5"	17' 4"	15' 2"	12' 9"	16' 7"	14' 6"	12' 3"
550S200-33	12	33	20' 10" e	19' 1"	16' 1"	18' 1" e	17' 4" e	14' 8"	16' 2" e	16' 1" e	13' 7" e	14' 9" e	14' 9" e	12' 10" e	13' 8" e	13' 8" e	12' 2" e	12' 9" e	12' 9" e	11' 8" e
550S200-33	16	33	18' 1" e	17' 4" e	14' 8"	15' 8" e	15' 8" e	13' 4" e	14' 0" e	14' 0" e	12' 4" e	12' 9" e	12' 9" e	11' 8" e	11' 10" e	11' 10" e	11' 1" e	11' 1" e	11' 1" e	10' 7" e
550S200-33	24	33	14' 9" e	14' 9" e	12' 10" e	12' 9" e	12' 9" e	11' 8" e	11' 5" e	11' 5" e	10' 10" e	10' 5" e	10' 5" e	10' 2" e	9' 8" e	9' 8" e	9' 8" e	9' 0" e	9' 0" e	9' 0" e
550S200-43	12	33	23' 11"	20' 11"	17' 7"	21' 7"	19' 0"	16' 0"	19' 4"	17' 7"	14' 10"	17' 7" e	16' 7"	14' 0"	16' 4" e	15' 9" e	13' 3"	15' 3" e	15' 1" e	12' 8"
550S200-43	16	33	21' 7"	19' 0"	16' 0"	18' 8"	17' 3"	14' 6"	16' 9" e	16' 0" e	13' 6"	15' 3" e	15' 1" e	12' 8"	14' 2" e	14' 2" e	12' 1" e	13' 3" e	13' 3" e	11' 6" e
550S200-43	24	33	17' 7" e	16' 7"	14' 0"	15' 3" e	15' 1" e	12' 8"	13' 8" e	13' 8" e	11' 10" e	12' 5" e	12' 5" e	11' 1" e	11' 6" e	11' 6" e	10' 6" e	10' 9" e	10' 9" e	10' 1" e
550S200-54	12	33	25' 8"	22' 5"	18' 11"	23' 4"	20' 4"	17' 2"	21' 8"	18' 11"	15' 11"	20' 4"	17' 10"	15' 0"	18' 10"	16' 11"	14' 3"	17' 8"	16' 2"	13' 8"
550S200-54	16	33	23' 4"	20' 4"	17' 2"	21' 2"	18' 6"	15' 7"	19' 4"	17' 2"	14' 6"	17' 8"	16' 2"	13' 8"	16' 4"	15' 4"	12' 11"	15' 3" e	14' 8"	12' 5"
550S200-54	24	33	20' 4"	17' 10"	15' 0"	17' 8"	16' 2"	13' 8"	15' 9"	15' 0"	12' 8"	14' 5" e	14' 1" e	11' 11"	13' 4" e	13' 4" e	11' 4"	12' 6" e	12' 6" e	10' 10" e
550S200-54	12	50	25' 8"	22' 5"	18' 11"	23' 4"	20' 4"	17' 2"	21' 8"	18' 11"	15' 11"	20' 4"	17' 10"	15' 0"	19' 4"	16' 11"	14' 3"	18' 6"	16' 2"	13' 8"
550S200-54	16	50	23' 4"	20' 4"	17' 2"	21' 2"	18' 6"	15' 7"	19' 8"	17' 2"	14' 6"	18' 6"	16' 2"	13' 8"	17' 7"	15' 4"	12' 11"	16' 10"	14' 8"	12' 5"
550S200-54	24	50	20' 4"	17' 10"	15' 0"	18' 6"	16' 2"	13' 8"	17' 2"	15' 0"	12' 8"	16' 2"	14' 1"	11' 11"	15' 4"	13' 5"	11' 4"	14' 5"	12' 10"	10' 10"
550S200-68	12	33	27' 6"	24' 1"	20' 3"	25' 0"	21' 10"	18' 5"	23' 3"	20' 3"	17' 1"	21' 10"	19' 1"	16' 1"	20' 9"	18' 2"	15' 3"	19' 10"	17' 4"	14' 8"
550S200-68	16	33	25' 0"	21' 10"	18' 5"	22' 9"	19' 10"	16' 9"	21' 1"	18' 5"	15' 7"	19' 10"	17' 4"	14' 8"	18' 10"	16' 6"	13' 11"	18' 0"	15' 9"	13' 3"
550S200-68	24	33	21' 10"	19' 1"	16' 1"	19' 10"	17' 4"	14' 8"	18' 5"	16' 1"	13' 7"	17' 4"	15' 2"	12' 9"	16' 1"	14' 5"	12' 2"	15' 0"	13' 9"	11' 7"
550S200-68	12	50	27' 6"	24' 1"	20' 3"	25' 0"	21' 10"	18' 5"	23' 3"	20' 3"	17' 1"	21' 10"	19' 1"	16' 1"	20' 9"	18' 2"	15' 3"	19' 10"	17' 4"	14' 8"
550S200-68	16	50	25' 0"	21' 10"	18' 5"	22' 9"	19' 10"	16' 9"	21' 1"	18' 5"	15' 7"	19' 10"	17' 4"	14' 8"	18' 10"	16' 6"	13' 11"	18' 0"	15' 9"	13' 3"
550S200-68	24	50	21' 10"	19' 1"	16' 1"	19' 10"	17' 4"	14' 8"	18' 5"	16' 1"	13' 7"	17' 4"	15' 2"	12' 9"	16' 6"	14' 5"	12' 2"	15' 9"	13' 9"	11' 7"
550S200-97	12	33	30' 7"	26' 8"	22' 6"	27' 9"	24' 3"	20' 5"	25' 9"	22' 6"	19' 0"	24' 3"	21' 2"	17' 10"	23' 0"	20' 1"	17' 0"	22' 0"	19' 3"	16' 3"
550S200-97	16	33	27' 9"	24' 3"	20' 5"	25' 3"	22' 0"	18' 7"	23' 5"	20' 5"	17' 3"	22' 0"	19' 3"	16' 3"	20' 11"	18' 3"	15' 5"	20' 0"	17' 6"	14' 9"
550S200-97	24	33	24' 3"	21' 2"	17' 10"	22' 0"	19' 3"	16' 3"	20' 5"	17' 10"	15' 1"	19' 3"	16' 10"	14' 2"	18' 3"	16' 0"	13' 6"	17' 6"	15' 3"	12' 11"
550S200-97	12	50	30' 7"	26' 8"	22' 6"	27' 9"	24' 3"	20' 5"	25' 9"	22' 6"	19' 0"	24' 3"	21' 2"	17' 10"	23' 0"	20' 1"	17' 0"	22' 0"	19' 3"	16' 3"
550S200-97	16	50	27' 9"	24' 3"	20' 5"	25' 3"	22' 0"	18' 7"	23' 5"	20' 5"	17' 3"	22' 0"	19' 3"	16' 3"	20' 11"	18' 3"	15' 5"	20' 0"	17' 6"	14' 9"
550S200-97	24	50	24' 3"	21' 2"	17' 10"	22' 0"	19' 3"	16' 3"	20' 5"	17' 10"	15' 1"	19' 3"	16' 10"	14' 2"	18' 3"	16' 0"	13' 6"	17' 6"	15' 3"	12' 11"
600S137-33	12	33	19' 1"	18' 7"	15' 8"	16' 6" e	16' 6" e	14' 3"	14' 9" e	14' 9" e	13' 3" e	13' 6" e	13' 6" e	12' 5" e	12' 6" e	12' 6" e	11' 10" e	11' 8" e	11' 8" e	11' 4" e
600S137-33	16	33	16' 6" e	16' 6" e	14' 3"	14' 4" e	14' 4" e	12' 11" e	12' 10" e	12' 10" e	12' 0" e	11' 8" e	11' 8" e	11' 4" e	10' 10" e	10' 10" e	10' 9" e	10' 1" e	10' 1" e	10' 1" e
600S137-33	24	33	13' 6" e	13' 6" e	12' 5" e	11' 8" e	11' 8" e	11' 4" e	10' 5" e	10' 5" e	10' 5" e	9' 6" e	9' 6" e	9' 6" e	8' 10" e	8' 10" e	8' 10" e	8' 3" e	8' 3" e	8' 3" e
600S137-43	12	33	22' 11"	20' 5"	17' 3"	19' 10"	18' 6"	15' 8"	17' 9"	17' 3"	14' 6"	16' 3"	16' 2"	13' 8"	15' 0" e	15' 0" e	13' 0"	14' 0" e	14' 0" e	12' 5"
600S137-43	16	33	19' 10"	18' 6"	15' 8"	17' 2"	16' 10"	14' 2"	15' 5"	15' 5"	13' 2"	14' 0" e	14' 0" e	12' 5"	13' 0" e	13' 0" e	11' 9" e	12' 2" e	12' 2" e	11' 3" e
600S137-43	24	33	16' 3"	16' 2"	13' 8"	14' 0" e	14' 0" e	12' 5"	12' 7" e	12' 7" e	11' 6" e	11' 6" e	11' 6" e	10' 10" e	10' 7" e	10' 7" e	10' 4" e	9' 11" e	9' 11" e	9' 10" e
600S137-54	12	33	25' 1"	21' 11"	18' 5"	22' 9"	19' 11"	16' 9"	20' 8"	18' 5"	15' 7"	18' 10"	17' 4"	14' 8"	17' 5"	16' 6"	13' 11"	16' 4"	15' 9"	13' 4"
600S137-54	16	33	22' 9"	19' 11"	16' 9"	20' 0"	18' 1"	15' 3"	17' 10"	16' 9"	14' 2"	16' 4"	15' 9"	13' 4"	15' 1"	15' 0"	12' 8"	14' 1"	14' 1"	12' 1"
600S137-54	24	33	18' 10"	17' 4"	14' 8"	16' 4"	15' 9"	13' 4"	14' 7"	14' 7"	12' 4"	13' 4" e	13' 4" e	11' 8"	12' 4" e	12' 4" e	11' 1"	11' 6" e	11' 6" e	10' 7" e
600S137-54	12	50	25' 1"	21' 11"	18' 5"	22' 9"	19' 11"	16' 9"	21' 2"	18' 5"	15' 7"	19' 11"	17' 4"	14' 8"	18' 11"	16' 6"	13' 11"	18' 1"	15' 9"	13' 4"
600S137-54	16	50	22' 9"	19' 11"	16' 9"	20' 8"	18' 1"	15' 3"	19' 2"	16' 9"	14' 2"	18' 1"	15' 9"	13' 4"	17' 2"	15' 0"	12' 8"	16' 4"	14' 4"	12' 1"
600S137-54	24	50	19' 11"	17' 4"	14' 8"	18' 1"	15' 9"	13' 4"	16' 9"	14' 8"	12' 4"	15' 4"	13' 9"	11' 8"	14' 3"	13' 1"	11' 1"	13' 4"	12' 6"	10' 7"
600S137-68	12	33	26' 10"	23' 5"	19' 9"	24' 5"	21' 4"	18' 0"	22' 8"	19' 9"	16' 8"	21' 3"	18' 7"	15' 8"	19' 8"	17' 8"	14' 11"	18' 5"	16' 11"	14' 3"
600S137-68	16	33	24' 5"	21' 4"	18' 0"	22' 2"	19' 4"	16' 4"	20' 2"	18' 0"	15' 2"	18' 5"	16' 11"	14' 3"	17' 1"	16' 1"	13' 7"	16' 0"	15' 4"	12' 11"
600S137-68	24	33	21' 3"	18' 7"	15' 8"	18' 5"	16' 11"	14' 3"	16' 6"	15' 8"	13' 3"	15' 1"	14' 9"	12' 5"	13' 11"	13' 11"	11' 10"	13' 0"	13' 0"	11' 4"
600S137-68	12	50	26' 10"	23' 5"	19' 9"	24' 5"	21' 4"	18' 0"	22' 8"	19' 9"	16' 8"	21' 4"	18' 7"	15' 8"	20' 3"	17' 8"	14' 11"	19' 4"	16' 11"	14' 3"
600S137-68	16	50	24' 5"	21' 4"	18' 0"	22' 2"	19' 4"	16' 4"	20' 7"	18' 0"	15' 2"	19' 4"	16' 11"	14' 3"	18' 5"	16' 1"	13' 7"	17' 7"	15' 4"	12' 11"
600S137-68	24	50	21' 4"	18' 7"	15' 8"	19' 4"	16' 11"	14' 3"	18' 0"	15' 8"	13' 3"	16' 11"	14' 9"	12' 5"	16' 1"	14' 0"	11' 10"	15' 4"	13' 5"	11' 4"
600S137-97	12	33	29' 8"	25' 11"	21' 10"	27' 0"	23' 7"	19' 10"	25' 0"	21' 10"	18' 5"	23' 7"	20' 7"	17' 4"	22' 5"	19' 7"	16' 6"	21' 5"	18' 8"	15' 9"
600S137-97	16	33	27' 0"	23' 7"	19' 10"	24' 6"	21' 5"	18' 1"	22' 9"	19' 10"	16' 9"	21' 5"	18' 8"	15' 9"	20' 4"	17' 9"	15' 0"	19' 5"	17' 0"	14' 4"
600S137-97	24	33	23' 7"	20' 7"	17' 4"	21' 5"	18' 8"	15' 9"	19' 10"	17' 4"	14' 8"	18' 8"	16' 4"	13' 9"	17' 9"	15' 6"	13' 1"	16' 11"	14' 10"	12' 6"
600S137-97	12	50	29' 8"	25' 11"	21' 10"	27' 0"	23' 7"	19' 10"	25' 0"	21' 10"	18' 5"	23' 7"	20' 7"	17' 4"	22' 5"	19' 7"	16' 6"	21' 5"	18' 8"	15' 9"
600S137-97	16	50	27' 0"	23' 7"	19' 10"	24' 6"	21' 5"	18' 1"	22' 9"	19' 10"	16' 9"	21' 5"	18' 8"	15' 9"	20' 4"	17' 9"	15' 0"	19' 5"	17' 0"	14' 4"
600S137-97	24	50	23' 7"	20' 7"	17' 4"	21' 5"	18' 8"	15' 9"	19' 10"	17' 4"	14' 8"	18' 8"	16' 4"	13' 9"	17' 9"	15' 6"	13' 1"	17' 0"	14' 10"	12' 6"
600S162-33	12	33	20' 6" e	19' 6"	16' 6"	17' 9" e	17' 9" e	15' 0"	15' 11" e	15' 11" e	13' 11" e	14' 6" e	14' 6" e	13' 1" e	13' 5" e	13' 5" e	12' 5" e	12' 7" e	12' 7" e	11' 11" e
600S162-33	16	33	17' 9" e	17' 9" e	15' 0"	15' 5" e	15' 5" e	13' 7" e	13' 9" e	13' 9" e	12' 8" e	12' 7" e	12' 7" e	11' 11" e	11' 8" e	11' 8" e	11' 3" e	10' 11" e	10' 11" e	10' 10" e
600S162-33	24	33	14' 6" e	14' 6" e	13' 1" e	12' 7" e	12' 7" e	11' 11" e	11' 3" e	11' 3" e	11' 0" e	10' 3" e	10' 3" e	10' 3" e	9' 6" e	9' 6" e	9' 6" e	8' 11" e	8' 11" e	8' 11" e
600S162-43	12	33	24' 4"	21' 3"	17' 11"	22' 0"	19' 4"	16' 4"	19' 8"	17' 11"	15' 2"	17' 11" e	16' 11"	14' 3"	16' 7" e	16' 1" e	13' 6"	15' 6" e	15' 4" e	12' 11"
600S162-43	16	33	22' 0"	19' 4"	16' 4"	19' 0"	17' 7"	14' 10"	17' 0" e	16' 4" e	13' 9"	15' 6" e	15' 4" e	12' 11"	14' 5" e	14' 5" e	12' 4" e	13' 5" e	13' 5" e	11' 9" e
600S162-43	24	33	17' 11" e	16' 11"	14' 3"	15' 6" e	15' 4" e	12' 11"	13' 11" e	13' 11" e	12' 0" e	12' 8" e	12' 8" e	11' 4" e	11' 9" e	11' 9" e	10' 9" e	11' 0" e	11' 0" e	10' 3" e
600S162-54	12	33	26' 2"	22' 10"	19' 3"	23' 9"	20' 9"	17' 6"	22' 1"	19' 3"	16' 3"	20' 9"	18' 1"	15' 3"	19' 5"	17' 3"	14' 6"	18' 2"	16' 6"	13' 11"
600S162-54	16	33	23' 9"	20' 9"	17' 6"	21' 7"	18' 10"	15' 11"	19' 11"	17' 6"	14' 9"	18' 2"	16' 6"	13' 11"	16' 10"	15' 8"	13' 2"	15' 9" e	15' 0" e	12' 7"
600S162-54	24	33	20' 9"	18' 1"	15' 3"	18' 2"	16' 6"	13' 11"	16' 3" e	15' 3"	12' 11"	14' 10" e	14' 5" e	12' 2"	13' 9" e	13' 8" e	11' 6" e	12' 10" e	12' 10" e	11' 0" e

See Curtain Wall Limiting Heights Table Notes on page 25.

Limiting Wall Heights - Curtain Wall

SFIA
STEEL FRAMING INDUSTRY ASSOCIATION

Stud Member	Spacing, in, oc	Fy, ksi	15 psf			20 psf			25 psf			30 psf			35 psf			40 psf		
			L/240	L/360	L/600	L/240	L/360	L/600	L/240	L/360	L/600	L/240	L/360	L/600	L/240	L/360	L/600	L/240	L/360	L/600
600S162-54	12	50	26' 2"	22' 10"	19' 3"	23' 9"	20' 9"	17' 6"	22' 1"	19' 3"	16' 3"	20' 9"	18' 1"	15' 3"	19' 8"	17' 3"	14' 6"	18' 10"	16' 6"	13' 11"
600S162-54	16	50	23' 9"	20' 9"	17' 6"	21' 7"	18' 10"	15' 11"	20' 0"	17' 6"	14' 9"	18' 10"	16' 6"	13' 11"	17' 11"	15' 8"	13' 2"	17' 2"	15' 0"	12' 7"
600S162-54	24	50	20' 9"	18' 1"	15' 3"	18' 10"	16' 6"	13' 11"	17' 6"	15' 3"	12' 11"	16' 6"	14' 5"	12' 2"	15' 8"	13' 8"	11' 6"	14' 8"	13' 1"	11' 0"
600S162-68	12	33	28' 0"	24' 6"	20' 8"	25' 6"	22' 3"	18' 9"	23' 8"	20' 8"	17' 5"	22' 3"	19' 5"	16' 5"	21' 2"	18' 5"	15' 7"	20' 3"	17' 8"	14' 11"
600S162-68	16	33	25' 6"	22' 3"	18' 9"	23' 2"	20' 3"	17' 1"	21' 6"	18' 9"	15' 10"	20' 3"	17' 8"	14' 11"	19' 2"	16' 9"	14' 2"	18' 4"	16' 0"	13' 6"
600S162-68	24	33	22' 3"	19' 5"	16' 5"	20' 3"	17' 8"	14' 11"	18' 9"	16' 5"	13' 10"	17' 3"	15' 5"	13' 0"	16' 0"	14' 8"	12' 4"	14' 11"	14' 0"	11' 10"
600S162-68	12	50	28' 0"	24' 6"	20' 8"	25' 6"	22' 3"	18' 9"	23' 8"	20' 8"	17' 5"	22' 3"	19' 5"	16' 5"	21' 2"	18' 5"	15' 7"	20' 3"	17' 8"	14' 11"
600S162-68	16	50	25' 6"	22' 3"	18' 9"	23' 2"	20' 3"	17' 1"	21' 6"	18' 9"	15' 10"	20' 3"	17' 8"	14' 11"	19' 2"	16' 9"	14' 2"	18' 4"	16' 0"	13' 6"
600S162-68	24	50	22' 3"	19' 5"	16' 5"	20' 3"	17' 8"	14' 11"	18' 9"	16' 5"	13' 10"	17' 8"	15' 5"	13' 0"	16' 9"	14' 8"	12' 4"	16' 0"	14' 0"	11' 10"
600S162-97	12	33	31' 1"	27' 2"	22' 11"	28' 3"	24' 8"	20' 9"	26' 2"	22' 11"	19' 4"	24' 8"	21' 6"	18' 2"	23' 5"	20' 5"	17' 3"	22' 5"	19' 7"	16' 6"
600S162-97	16	33	28' 3"	24' 8"	20' 9"	25' 8"	22' 5"	18' 11"	23' 10"	20' 9"	17' 6"	22' 5"	19' 7"	16' 6"	21' 3"	18' 7"	15' 8"	20' 4"	17' 9"	15' 0"
600S162-97	24	33	24' 8"	21' 6"	18' 2"	22' 5"	19' 7"	16' 6"	20' 9"	18' 2"	15' 4"	19' 7"	17' 1"	14' 5"	18' 7"	16' 3"	13' 8"	17' 9"	15' 6"	13' 1"
600S162-97	12	50	31' 1"	27' 2"	22' 11"	28' 3"	24' 8"	20' 9"	26' 2"	22' 11"	19' 4"	24' 8"	21' 6"	18' 2"	23' 5"	20' 5"	17' 3"	22' 5"	19' 7"	16' 6"
600S162-97	16	50	28' 3"	24' 8"	20' 9"	25' 8"	22' 5"	18' 11"	23' 10"	20' 9"	17' 6"	22' 5"	19' 7"	16' 6"	21' 3"	18' 7"	15' 8"	20' 4"	17' 9"	15' 0"
600S162-97	24	50	24' 8"	21' 6"	18' 2"	22' 5"	19' 7"	16' 6"	20' 9"	18' 2"	15' 4"	19' 7"	17' 1"	14' 5"	18' 7"	16' 3"	13' 8"	17' 9"	15' 6"	13' 1"
600S162-118	12	33	32' 10"	28' 8"	24' 2"	29' 10"	26' 0"	22' 0"	27' 8"	24' 2"	20' 5"	26' 0"	22' 9"	19' 2"	24' 9"	21' 7"	18' 3"	23' 8"	20' 8"	17' 5"
600S162-118	16	33	29' 10"	26' 0"	22' 0"	27' 1"	23' 8"	19' 11"	25' 2"	22' 0"	18' 6"	23' 8"	20' 8"	17' 5"	22' 6"	19' 8"	16' 7"	21' 6"	18' 9"	15' 10"
600S162-118	24	33	26' 0"	22' 9"	19' 2"	23' 8"	20' 8"	17' 5"	22' 0"	19' 2"	16' 2"	20' 8"	18' 1"	15' 3"	19' 8"	17' 2"	14' 6"	18' 9"	16' 5"	13' 10"
600S162-118	12	50	32' 10"	28' 8"	24' 2"	29' 10"	26' 0"	22' 0"	27' 8"	24' 2"	20' 5"	26' 0"	22' 9"	19' 2"	24' 9"	21' 7"	18' 3"	23' 8"	20' 8"	17' 5"
600S162-118	16	50	29' 10"	26' 0"	22' 0"	27' 1"	23' 8"	19' 11"	25' 2"	22' 0"	18' 6"	23' 8"	20' 8"	17' 5"	22' 6"	19' 8"	16' 7"	21' 6"	18' 9"	15' 10"
600S162-118	24	50	26' 0"	22' 9"	19' 2"	23' 8"	20' 8"	17' 5"	22' 0"	19' 2"	16' 2"	20' 8"	18' 1"	15' 3"	19' 8"	17' 2"	14' 6"	18' 9"	16' 5"	13' 10"
600S200-33	12	33	21' 11" e	20' 6" e	17' 3"	18' 11" e	18' 7" e	15' 8" e	16' 11" e	16' 11" e	14' 7" e	15' 6" e	15' 6" e	13' 8" e	14' 4" e	14' 4" e	13' 0" e	13' 5" e	13' 5" e	12' 5" e
600S200-33	16	33	18' 11" e	18' 7" e	15' 8" e	16' 5" e	16' 5" e	14' 3" e	14' 8" e	14' 8" e	13' 3" e	13' 5" e	13' 5" e	12' 5" e	12' 5" e	12' 5" e	11' 10" e	11' 7" e	11' 7" e	11' 4" e
600S200-33	24	33	15' 6" e	15' 6" e	13' 8" e	13' 5" e	13' 5" e	12' 5" e	12' 0" e	12' 0" e	11' 7" e	10' 11" e	10' 11" e	10' 10" e	10' 2" e	10' 2" e	10' 2" e	9' 6" e	9' 6" e	9' 6" e
600S200-43	12	33	25' 7"	22' 4"	18' 10"	22' 8"	20' 4"	17' 2"	20' 3"	18' 10"	15' 11"	18' 6" e	17' 9" e	15' 0"	17' 1" e	16' 10" e	14' 3"	16' 0" e	16' 0" e	13' 7" e
600S200-43	16	33	22' 8"	20' 4"	17' 2"	19' 7" e	18' 5"	15' 7"	17' 7" e	17' 2" e	14' 5"	16' 0" e	16' 0" e	13' 7" e	14' 10" e	14' 10" e	12' 11" e	13' 10" e	13' 10" e	12' 4" e
600S200-43	24	33	18' 6" e	17' 9" e	15' 0"	16' 0" e	16' 0" e	13' 7" e	14' 4" e	14' 4" e	12' 7" e	13' 1" e	13' 1" e	11' 11" e	12' 1" e	12' 1" e	11' 3" e	11' 4" e	11' 4" e	10' 9" e
600S200-54	12	33	27' 6"	24' 0"	20' 3"	24' 11"	21' 10"	18' 5"	23' 2"	20' 3"	17' 1"	21' 10"	19' 1"	16' 1"	20' 6"	18' 1"	15' 3"	19' 2"	17' 4"	14' 7"
600S200-54	16	33	24' 11"	21' 10"	18' 5"	22' 8"	19' 10"	16' 8"	21' 0"	18' 5"	15' 6"	19' 2"	17' 4"	14' 7"	17' 9" e	16' 5"	13' 10"	16' 7" e	15' 9" e	13' 3"
600S200-54	24	33	21' 10"	19' 1"	16' 1"	19' 2"	17' 4"	14' 7"	17' 2" e	16' 1" e	13' 7"	15' 8" e	15' 1" e	12' 9"	14' 6" e	14' 4" e	12' 1" e	13' 7" e	13' 7" e	11' 7" e
600S200-54	12	50	27' 6"	24' 0"	20' 3"	24' 11"	21' 10"	18' 5"	23' 2"	20' 3"	17' 1"	21' 10"	19' 1"	16' 1"	20' 9"	18' 1"	15' 3"	19' 10"	17' 4"	14' 7"
600S200-54	16	50	24' 11"	21' 10"	18' 5"	22' 8"	19' 10"	16' 8"	21' 1"	18' 5"	15' 6"	19' 10"	17' 4"	14' 7"	18' 10"	16' 5"	13' 10"	18' 0"	15' 9"	13' 3"
600S200-54	24	50	21' 10"	19' 1"	16' 1"	19' 10"	17' 4"	14' 7"	18' 5"	16' 1"	13' 7"	17' 4"	15' 1"	12' 9"	16' 2"	14' 4"	12' 1"	15' 1" e	13' 9"	11' 7"
600S200-68	12	33	29' 6"	25' 9"	21' 9"	26' 9"	23' 5"	19' 9"	24' 10"	21' 9"	18' 4"	23' 5"	20' 5"	17' 3"	22' 3"	19' 5"	16' 4"	21' 3"	18' 7"	15' 8"
600S200-68	16	33	26' 9"	23' 5"	19' 9"	24' 4"	21' 3"	17' 11"	22' 7"	19' 9"	16' 8"	21' 3"	18' 7"	15' 8"	20' 2"	17' 8"	14' 11"	19' 4"	16' 10"	14' 3"
600S200-68	24	33	23' 5"	20' 5"	17' 3"	21' 3"	18' 7"	15' 8"	19' 9"	17' 3"	14' 6"	18' 3"	16' 3"	13' 8"	16' 11"	15' 5"	13' 0"	15' 10" e	14' 9"	12' 5"
600S200-68	12	50	29' 6"	25' 9"	21' 9"	26' 9"	23' 5"	19' 9"	24' 10"	21' 9"	18' 4"	23' 5"	20' 5"	17' 3"	22' 3"	19' 5"	16' 4"	21' 3"	18' 7"	15' 8"
600S200-68	16	50	26' 9"	23' 5"	19' 9"	24' 4"	21' 3"	17' 11"	22' 7"	19' 9"	16' 8"	21' 3"	18' 7"	15' 8"	20' 2"	17' 8"	14' 11"	19' 4"	16' 10"	14' 3"
600S200-68	24	50	23' 5"	20' 5"	17' 3"	21' 3"	18' 7"	15' 8"	19' 9"	17' 3"	14' 6"	18' 7"	16' 3"	13' 8"	17' 8"	15' 5"	13' 0"	16' 10"	14' 9"	12' 5"
600S200-97	12	33	32' 9"	28' 7"	24' 1"	29' 9"	26' 0"	21' 11"	27' 7"	24' 1"	20' 4"	26' 0"	22' 8"	19' 2"	24' 8"	21' 7"	18' 2"	23' 7"	20' 7"	17' 5"
600S200-97	16	33	29' 9"	26' 0"	21' 11"	27' 0"	23' 7"	19' 11"	25' 1"	21' 11"	18' 6"	23' 7"	20' 7"	17' 5"	22' 5"	19' 7"	16' 6"	21' 5"	18' 9"	15' 10"
600S200-97	24	33	26' 0"	22' 8"	19' 2"	23' 7"	20' 7"	17' 5"	21' 11"	19' 2"	16' 2"	20' 7"	18' 0"	15' 2"	19' 7"	17' 1"	14' 5"	18' 9"	16' 4"	13' 10"
600S200-97	12	50	32' 9"	28' 7"	24' 1"	29' 9"	26' 0"	21' 11"	27' 7"	24' 1"	20' 4"	26' 0"	22' 8"	19' 2"	24' 8"	21' 7"	18' 2"	23' 7"	20' 7"	17' 5"
600S200-97	16	50	29' 9"	26' 0"	21' 11"	27' 0"	23' 7"	19' 11"	25' 1"	21' 11"	18' 6"	23' 7"	20' 7"	17' 5"	22' 5"	19' 7"	16' 6"	21' 5"	18' 9"	15' 10"
600S200-97	24	50	26' 0"	22' 8"	19' 2"	23' 7"	20' 7"	17' 5"	21' 11"	19' 2"	16' 2"	20' 7"	18' 0"	15' 2"	19' 7"	17' 1"	14' 5"	18' 9"	16' 4"	13' 10"
600S200-118	12	33	34' 7"	30' 3"	25' 6"	31' 5"	27' 6"	23' 2"	29' 2"	25' 6"	21' 6"	27' 6"	24' 0"	20' 3"	26' 1"	22' 10"	19' 3"	25' 0"	21' 10"	18' 5"
600S200-118	16	33	31' 5"	27' 6"	23' 2"	28' 7"	25' 0"	21' 1"	26' 6"	23' 2"	19' 7"	25' 0"	21' 10"	18' 5"	23' 9"	20' 9"	17' 6"	22' 8"	19' 10"	16' 9"
600S200-118	24	33	27' 6"	24' 0"	20' 3"	25' 0"	21' 10"	18' 5"	23' 2"	20' 3"	17' 1"	21' 10"	19' 1"	16' 1"	20' 9"	18' 1"	15' 3"	19' 10"	17' 4"	14' 7"
600S200-118	12	50	34' 7"	30' 3"	25' 6"	31' 5"	27' 6"	23' 2"	29' 2"	25' 6"	21' 6"	27' 6"	24' 0"	20' 3"	26' 1"	22' 10"	19' 3"	25' 0"	21' 10"	18' 5"
600S200-118	16	50	31' 5"	27' 6"	23' 2"	28' 7"	25' 0"	21' 1"	26' 6"	23' 2"	19' 7"	25' 0"	21' 10"	18' 5"	23' 9"	20' 9"	17' 6"	22' 8"	19' 10"	16' 9"
600S200-118	24	50	27' 6"	24' 0"	20' 3"	25' 0"	21' 10"	18' 5"	23' 2"	20' 3"	17' 1"	21' 10"	19' 1"	16' 1"	20' 9"	18' 1"	15' 3"	19' 10"	17' 4"	14' 7"
600S250-43	12	33	26' 10"	23' 5"	19' 9"	23' 3"	21' 3"	17' 11"	20' 10" e	19' 9"	16' 8"	19' 0" e	18' 7" e	15' 8"	17' 7" e	17' 7" e	14' 11" e	16' 5" e	16' 5" e	14' 3" e
600S250-43	16	33	23' 3"	21' 3"	17' 11"	20' 2" e	19' 4"	16' 4"	18' 0" e	17' 11" e	15' 2"	16' 5" e	16' 5" e	14' 3" e	15' 3" e	15' 3" e	13' 6" e	14' 3" e	14' 3" e	12' 11" e
600S250-43	24	33	19' 0" e	18' 7" e	15' 8"	16' 5" e	16' 5" e	14' 3" e	14' 8" e	14' 8" e	13' 3" e	13' 5" e	13' 5" e	12' 5" e	12' 5" e	12' 5" e	11' 10" e	11' 7" e	11' 7" e	11' 4" e
600S250-54	12	33	28' 9"	25' 2"	21' 2"	26' 2"	22' 10"	19' 3"	24' 2"	21' 2"	17' 11"	22' 1"	19' 11"	16' 10"	20' 5"	18' 11"	16' 0"	19' 1"	18' 2"	15' 4"
600S250-54	16	33	26' 2"	22' 10"	19' 3"	23' 5"	20' 9"	17' 6"	20' 11"	19' 3"	16' 3"	19' 1"	18' 2"	15' 4"	17' 8" e	17' 3" e	14' 6"	16' 7" e	16' 6" e	13' 11"
600S250-54	24	33	22' 1"	19' 11"	16' 10"	19' 1"	18' 2"	15' 4"	17' 1" e	16' 10" e	14' 2"	15' 7" e	15' 7" e	13' 4" e	14' 5" e	14' 5" e	12' 8" e	13' 6" e	13' 6" e	12' 2" e
600S250-54	12	50	28' 8"	25' 0"	21' 1"	26' 0"	22' 9"	19' 2"	24' 2"	21' 1"	17' 10"	22' 9"	19' 10"	16' 9"	21' 7"	18' 10"	15' 11"	20' 8"	18' 1"	15' 3"
600S250-54	16	50	26' 0"	22' 9"	19' 2"	23' 8"	20' 8"	17' 5"	21' 11"	19' 2"	16' 2"	20' 8"	18' 1"	15' 3"	19' 7"	17' 2"	14' 6"	18' 9"	16' 5"	13' 10"
600S250-54	24	50	22' 9"	19' 10"	16' 9"	20' 8"	18' 1"	15' 3"	19' 2"	16' 9"	14' 2"	17' 10"	15' 9"	13' 4"	16' 6"	15' 0"	12' 8"	15' 6" e	14' 4"	12' 1"
600S250-68	12	33	30' 11"	27' 0"	22' 9"	28' 1"	24' 6"	20' 8"	26' 1"	22' 9"	19' 2"	24' 6"	21' 5"	18' 1"	23' 4"	20' 4"	17' 2"	22' 3"	19' 6"	16' 5"
600S250-68	16	33	28' 1"	24' 6"	20' 8"	25' 6"	22' 3"	18' 10"	23' 8"	20' 8"	17' 5"	22' 3"	19' 6"	16' 5"	21' 2"	18' 6"	15' 7"	19' 10"	17' 8"	14' 11"
600S250-68	24	33	24' 6"	21' 5"	18' 1"	22' 3"	19' 6"	16' 5"	20' 6"	18' 1"	15' 3"	18' 9"	17' 0"	14' 4"	17' 4" e	16' 2"	13' 8"	16' 2" e	15' 5" e	13' 0"
600S250-68	12	50	30' 11"	27' 0"	22' 9"	28' 1"	24' 6"	20' 8"	26' 1"	22' 9"	19' 2"	24' 6"	21' 5"	18' 1"	23' 4"	20' 4"	17' 2"	22' 3"	19' 6"	16' 5"
600S250-68	16	50	28' 1"	24' 6"	20' 8"	25' 6"	22' 3"	18' 10"	23' 8"	20' 8"	17' 5"	22' 3"	19' 6"	16' 5"	21' 2"	18' 6"	15' 7"	20' 3"	17' 8"	14' 11"
600S250-68	24	50	24' 6"	21' 5"	18' 1"	22' 3"	19' 6"	16' 5"	20' 8"	18' 1"	15' 3"	19' 6"	17' 0"	14' 4"	18' 6"	16' 2"	13' 7"	17' 8"	15' 5"	13' 0"

See Curtain Wall Limiting Heights Table Notes on page 25.

Limiting Wall Heights - Curtain Wall

Stud Member	Spacing, in, oc	Fy, ksi	15 psf			20 psf			25 psf			30 psf			35 psf			40 psf		
			L/240	L/360	L/600	L/240	L/360	L/600	L/240	L/360	L/600	L/240	L/360	L/600	L/240	L/360	L/600	L/240	L/360	L/600
600S250-97	12	33	34' 4"	30' 0"	25' 4"	31' 3"	27' 3"	23' 0"	29' 0"	25' 4"	21' 4"	27' 3"	23' 10"	20' 1"	25' 11"	22' 8"	19' 1"	24' 9"	21' 8"	18' 3"
600S250-97	16	33	31' 3"	27' 3"	23' 0"	28' 4"	24' 9"	20' 11"	26' 4"	23' 0"	19' 5"	24' 9"	21' 8"	18' 3"	23' 6"	20' 7"	17' 4"	22' 6"	19' 8"	16' 7"
600S250-97	24	33	27' 3"	23' 10"	20' 1"	24' 9"	21' 8"	18' 3"	23' 0"	20' 1"	16' 11"	21' 8"	18' 11"	15' 11"	20' 7"	18' 0"	15' 2"	19' 8"	17' 2"	14' 6"
600S250-97	12	50	34' 4"	30' 0"	25' 4"	31' 3"	27' 3"	23' 0"	29' 0"	25' 4"	21' 4"	27' 3"	23' 10"	20' 1"	25' 11"	22' 8"	19' 1"	24' 9"	21' 8"	18' 3"
600S250-97	16	50	31' 3"	27' 3"	23' 0"	28' 4"	24' 9"	20' 11"	26' 4"	23' 0"	19' 5"	24' 9"	21' 8"	18' 3"	23' 6"	20' 7"	17' 4"	22' 6"	19' 8"	16' 7"
600S250-97	24	50	27' 3"	23' 10"	20' 1"	24' 9"	21' 8"	18' 3"	23' 0"	20' 1"	16' 11"	21' 8"	18' 11"	15' 11"	20' 7"	18' 0"	15' 2"	19' 8"	17' 2"	14' 6"
600S250-118	12	33	36' 5"	31' 9"	26' 10"	33' 1"	28' 11"	24' 4"	30' 8"	26' 10"	22' 7"	28' 11"	25' 3"	21' 3"	27' 5"	24' 0"	20' 3"	26' 3"	22' 11"	19' 4"
600S250-118	16	33	33' 1"	28' 11"	24' 4"	30' 0"	26' 3"	22' 2"	27' 11"	24' 4"	20' 7"	26' 3"	22' 11"	19' 4"	24' 11"	21' 9"	18' 4"	23' 10"	20' 10"	17' 7"
600S250-118	24	33	28' 11"	25' 3"	21' 3"	26' 3"	22' 11"	19' 4"	24' 4"	21' 3"	17' 11"	22' 11"	20' 0"	16' 11"	21' 9"	19' 0"	16' 1"	20' 10"	18' 2"	15' 4"
600S250-118	12	50	36' 5"	31' 9"	26' 10"	33' 1"	28' 11"	24' 4"	30' 8"	26' 10"	22' 7"	28' 11"	25' 3"	21' 3"	27' 5"	24' 0"	20' 3"	26' 3"	22' 11"	19' 4"
600S250-118	16	50	33' 1"	28' 11"	24' 4"	30' 0"	26' 3"	22' 2"	27' 11"	24' 4"	20' 7"	26' 3"	22' 11"	19' 4"	24' 11"	21' 9"	18' 4"	23' 10"	20' 10"	17' 7"
600S250-118	24	50	28' 11"	25' 3"	21' 3"	26' 3"	22' 11"	19' 4"	24' 4"	21' 3"	17' 11"	22' 11"	20' 0"	16' 11"	21' 9"	19' 0"	16' 1"	20' 10"	18' 2"	15' 4"
600S300-54	12	33	29' 10"	26' 1"	22' 0"	27' 2"	23' 8"	20' 0"	24' 8"	22' 0"	18' 7"	22' 6"	20' 9"	17' 6"	20' 10"	19' 8"	16' 7"	19' 6"	18' 10"	15' 10"
600S300-54	16	33	27' 2"	23' 8"	20' 0"	23' 11"	21' 6"	18' 2"	21' 4"	20' 0"	16' 10"	19' 6"	18' 10"	15' 10"	18' 1" e	17' 10" e	15' 1"	16' 11" e	16' 11" e	14' 5"
600S300-54	24	33	22' 6"	20' 9"	17' 6"	19' 6"	18' 10"	15' 10"	17' 5" e	17' 5" e	14' 9"	15' 11" e	15' 11" e	13' 10" e	14' 9" e	14' 9" e	13' 2" e	13' 9" e	13' 9" e	12' 7" e
600S300-54	12	50	29' 3"	25' 7"	21' 7"	26' 7"	23' 3"	19' 7"	24' 8"	21' 7"	18' 2"	23' 3"	20' 3"	17' 1"	22' 1"	19' 3"	16' 3"	21' 1"	18' 5"	15' 7"
600S300-54	16	50	26' 7"	23' 3"	19' 7"	24' 2"	21' 1"	17' 10"	22' 5"	19' 7"	16' 6"	21' 1"	18' 5"	15' 7"	20' 1"	17' 6"	14' 9"	19' 2"	16' 9"	14' 2"
600S300-54	24	50	23' 3"	20' 3"	17' 1"	21' 1"	18' 5"	15' 7"	19' 7"	17' 1"	14' 5"	18' 2"	16' 1"	13' 7"	16' 10"	15' 4"	12' 11"	15' 9" e	14' 8"	12' 4"
600S300-68	12	33	32' 2"	28' 1"	23' 9"	29' 3"	25' 7"	21' 7"	27' 2"	23' 9"	20' 0"	25' 7"	22' 4"	18' 10"	24' 3"	21' 2"	17' 11"	22' 8"	20' 3"	17' 1"
600S300-68	16	33	29' 3"	25' 7"	21' 7"	26' 7"	23' 3"	19' 7"	24' 8"	21' 7"	18' 2"	22' 8"	20' 3"	17' 1"	21' 0"	19' 3"	16' 3"	19' 8"	18' 5"	15' 6"
600S300-68	24	33	25' 7"	22' 4"	18' 10"	22' 8"	20' 3"	17' 1"	20' 4"	18' 10"	15' 11"	18' 6"	17' 9"	14' 11"	17' 2"	16' 10"	14' 2"	16' 1" e	16' 1" e	13' 7"
600S300-68	12	50	31' 11"	27' 11"	23' 6"	29' 0"	25' 4"	21' 5"	26' 11"	23' 6"	19' 10"	25' 4"	22' 2"	18' 8"	24' 1"	21' 0"	17' 9"	23' 0"	20' 2"	17' 0"
600S300-68	16	50	29' 0"	25' 4"	21' 5"	26' 4"	23' 0"	19' 5"	24' 6"	21' 5"	18' 0"	23' 0"	20' 2"	17' 0"	21' 11"	19' 1"	16' 1"	20' 11"	18' 3"	15' 5"
600S300-68	24	50	25' 4"	22' 2"	18' 8"	23' 0"	20' 2"	17' 0"	21' 5"	18' 8"	15' 9"	20' 2"	17' 7"	14' 10"	19' 1"	16' 8"	14' 1"	18' 3"	16' 0"	13' 6"
600S300-97	12	33	35' 10"	31' 4"	26' 5"	32' 7"	28' 5"	24' 0"	30' 3"	26' 5"	22' 3"	28' 5"	24' 10"	21' 0"	27' 0"	23' 7"	19' 11"	25' 10"	22' 7"	19' 1"
600S300-97	16	33	32' 7"	28' 5"	24' 0"	29' 7"	25' 10"	21' 10"	27' 6"	24' 0"	20' 3"	25' 10"	22' 7"	19' 1"	24' 7"	21' 5"	18' 1"	23' 6"	20' 6"	17' 4"
600S300-97	24	33	28' 5"	24' 10"	21' 0"	25' 10"	22' 7"	19' 1"	24' 0"	21' 0"	17' 8"	22' 7"	19' 9"	16' 8"	21' 5"	18' 9"	15' 10"	20' 6"	17' 11"	15' 1"
600S300-97	12	50	35' 8"	31' 2"	26' 4"	32' 5"	28' 4"	23' 11"	30' 1"	26' 4"	22' 2"	28' 4"	24' 9"	20' 10"	26' 11"	23' 6"	19' 10"	25' 9"	22' 6"	19' 0"
600S300-97	16	50	32' 5"	28' 4"	23' 11"	29' 6"	25' 9"	21' 8"	27' 4"	23' 11"	20' 2"	25' 9"	22' 6"	19' 0"	24' 5"	21' 4"	18' 0"	23' 5"	20' 5"	17' 3"
600S300-97	24	50	28' 4"	24' 9"	20' 10"	25' 9"	22' 6"	19' 0"	23' 11"	20' 10"	17' 7"	22' 6"	19' 8"	16' 7"	21' 4"	18' 8"	15' 9"	20' 5"	17' 10"	15' 1"
600S300-118	12	33	38' 0"	33' 2"	28' 0"	34' 6"	30' 2"	25' 5"	32' 1"	28' 0"	23' 7"	30' 2"	26' 4"	22' 3"	28' 8"	25' 0"	21' 1"	27' 5"	23' 11"	20' 2"
600S300-118	16	33	34' 6"	30' 2"	25' 5"	31' 4"	27' 5"	23' 1"	29' 1"	25' 5"	21' 5"	27' 5"	23' 11"	20' 2"	26' 0"	22' 9"	19' 2"	24' 11"	21' 9"	18' 4"
600S300-118	24	33	30' 2"	26' 4"	22' 3"	27' 5"	23' 11"	20' 2"	25' 5"	22' 3"	18' 9"	23' 11"	20' 11"	17' 8"	22' 9"	19' 10"	16' 9"	21' 9"	19' 0"	16' 0"
600S300-118	12	50	37' 11"	33' 1"	27' 11"	34' 5"	30' 1"	25' 4"	32' 0"	27' 11"	23' 7"	30' 1"	26' 3"	22' 2"	28' 7"	24' 11"	21' 1"	27' 4"	23' 10"	20' 2"
600S300-118	16	50	34' 5"	30' 1"	25' 4"	31' 3"	27' 4"	23' 1"	29' 0"	25' 4"	21' 5"	27' 4"	23' 10"	20' 2"	25' 11"	22' 8"	19' 1"	24' 10"	21' 8"	18' 4"
600S300-118	24	50	30' 1"	26' 3"	22' 2"	27' 4"	23' 10"	20' 2"	25' 4"	22' 2"	18' 8"	23' 10"	20' 10"	17' 7"	22' 8"	19' 10"	16' 8"	21' 8"	18' 11"	16' 0"
600S350-54	12	33	31' 4"	27' 4"	23' 1"	28' 5"	24' 10"	20' 11"	26' 5"	23' 1"	19' 5"	24' 10"	21' 8"	18' 4"	23' 1" e	20' 7"	17' 5"	21' 7" e	19' 9"	16' 8"
600S350-54	16	33	28' 5"	24' 10"	20' 11"	25' 10"	22' 7"	19' 0"	23' 8"	20' 11"	17' 8"	21' 7" e	19' 9"	16' 8"	20' 0" e	18' 9" e	15' 10"	18' 8" e	17' 11" e	15' 1" e
600S350-54	24	33	24' 10"	21' 8"	18' 4"	21' 7" e	19' 9"	16' 8"	19' 4" e	18' 4" e	15' 5"	17' 8" e	17' 3" e	14' 6" e	16' 4" e	16' 4" e	13' 10" e	15' 3" e	15' 3" e	13' 2" e
600S350-54	12	50	30' 11"	27' 0"	22' 9"	28' 1"	24' 6"	20' 8"	26' 1"	22' 9"	19' 2"	24' 6"	21' 5"	18' 1"	23' 3"	20' 4"	17' 2"	22' 3"	19' 6"	16' 5"
600S350-54	16	50	28' 1"	24' 6"	20' 8"	25' 6"	22' 3"	18' 9"	23' 8"	20' 8"	17' 5"	22' 3"	19' 6"	16' 5"	21' 2"	18' 6"	15' 7"	20' 3"	17' 8"	14' 11"
600S350-54	24	50	24' 6"	21' 5"	18' 1"	22' 3"	19' 6"	16' 5"	20' 8"	18' 1"	15' 3"	19' 6"	17' 0"	14' 4"	18' 6" e	16' 2"	13' 7"	17' 5" e	15' 5" e	13' 0"
600S350-68	12	33	33' 11"	29' 7"	25' 0"	30' 10"	26' 11"	22' 8"	28' 7"	25' 0"	21' 1"	26' 11"	23' 6"	19' 10"	25' 7"	22' 4"	18' 10"	24' 5"	21' 4"	18' 0"
600S350-68	16	33	30' 10"	26' 11"	22' 8"	28' 0"	24' 5"	20' 7"	26' 0"	22' 8"	19' 2"	24' 5"	21' 4"	18' 0"	23' 2"	20' 3"	17' 1"	21' 8"	19' 5"	16' 4"
600S350-68	24	33	26' 11"	23' 6"	19' 10"	24' 5"	21' 4"	18' 0"	22' 5"	19' 10"	16' 9"	20' 5" e	18' 8"	15' 9"	18' 11" e	17' 9" e	14' 11"	17' 9" e	16' 11" e	14' 4"
600S350-68	12	50	33' 9"	29' 6"	24' 11"	30' 8"	26' 10"	22' 7"	28' 6"	24' 11"	21' 0"	26' 10"	23' 5"	19' 9"	25' 6"	22' 3"	18' 9"	24' 4"	21' 3"	17' 11"
600S350-68	16	50	30' 8"	26' 10"	22' 7"	27' 10"	24' 4"	20' 6"	25' 11"	22' 7"	19' 1"	24' 4"	21' 3"	17' 11"	23' 2"	20' 2"	17' 1"	22' 1"	19' 4"	16' 4"
600S350-68	24	50	26' 10"	23' 5"	19' 9"	24' 4"	21' 3"	17' 11"	22' 7"	19' 9"	16' 8"	21' 3"	18' 7"	15' 8"	20' 2"	17' 8"	14' 11"	19' 4"	16' 11"	14' 3"
600S350-97	12	33	37' 9"	33' 0"	27' 10"	34' 4"	30' 0"	25' 3"	31' 10"	27' 10"	23' 6"	30' 0"	26' 2"	22' 1"	28' 6"	24' 11"	21' 0"	27' 3"	23' 10"	20' 1"
600S350-97	16	33	34' 4"	30' 0"	25' 3"	31' 2"	27' 3"	23' 0"	28' 11"	25' 3"	21' 4"	27' 3"	23' 10"	20' 1"	25' 10"	22' 7"	19' 1"	24' 9"	21' 7"	18' 3"
600S350-97	24	33	30' 0"	26' 2"	22' 1"	27' 3"	23' 10"	20' 1"	25' 3"	22' 1"	18' 8"	23' 10"	20' 9"	17' 6"	22' 7"	19' 9"	16' 8"	21' 7"	18' 11"	15' 11"
600S350-97	12	50	37' 9"	33' 0"	27' 10"	34' 4"	30' 0"	25' 3"	31' 10"	27' 10"	23' 6"	30' 0"	26' 2"	22' 1"	28' 6"	24' 11"	21' 0"	27' 3"	23' 10"	20' 1"
600S350-97	16	50	34' 4"	30' 0"	25' 3"	31' 2"	27' 3"	23' 0"	28' 11"	25' 3"	21' 4"	27' 3"	23' 10"	20' 1"	25' 10"	22' 7"	19' 1"	24' 9"	21' 7"	18' 3"
600S350-97	24	50	30' 0"	26' 2"	22' 1"	27' 3"	23' 10"	20' 1"	25' 3"	22' 1"	18' 8"	23' 10"	20' 9"	17' 6"	22' 7"	19' 9"	16' 8"	21' 7"	18' 11"	15' 11"
600S350-118	12	33	40' 1"	35' 0"	29' 6"	36' 5"	31' 10"	26' 10"	33' 10"	29' 6"	24' 11"	31' 10"	27' 9"	23' 5"	30' 3"	26' 5"	22' 3"	28' 11"	25' 3"	21' 3"
600S350-118	16	33	36' 5"	31' 10"	26' 10"	33' 1"	28' 11"	24' 4"	30' 8"	26' 10"	22' 8"	28' 11"	25' 3"	21' 3"	27' 5"	24' 0"	20' 3"	26' 3"	22' 11"	19' 4"
600S350-118	24	33	31' 10"	27' 9"	23' 5"	28' 11"	25' 3"	21' 3"	26' 10"	23' 5"	19' 9"	25' 3"	22' 1"	18' 7"	24' 0"	20' 11"	17' 8"	22' 11"	20' 0"	16' 11"
600S350-118	12	50	40' 1"	35' 0"	29' 6"	36' 5"	31' 10"	26' 10"	33' 10"	29' 6"	24' 11"	31' 10"	27' 9"	23' 5"	30' 3"	26' 5"	22' 3"	28' 11"	25' 3"	21' 3"
600S350-118	16	50	36' 5"	31' 10"	26' 10"	33' 1"	28' 11"	24' 4"	30' 8"	26' 10"	22' 8"	28' 11"	25' 3"	21' 3"	27' 5"	24' 0"	20' 3"	26' 3"	22' 11"	19' 4"
600S350-118	24	50	31' 10"	27' 9"	23' 5"	28' 11"	25' 3"	21' 3"	26' 10"	23' 5"	19' 9"	25' 3"	22' 1"	18' 7"	24' 0"	20' 11"	17' 8"	22' 11"	20' 0"	16' 11"
800S137-33	12	33	21' 10" e	21' 10" e	19' 7" e	18' 11" e	18' 11" e	17' 9" e	16' 11" e	16' 11" e	16' 6" e	15' 5" e	15' 5" e	15' 5" e	14' 3" e	14' 3" e	14' 3" e	13' 4" e	13' 4" e	13' 4" e
800S137-33	16	33	18' 11" e	18' 11" e	17' 9" e	16' 4" e	16' 4" e	16' 2" e	14' 8" e	14' 8" e	14' 8" e	13' 4" e	13' 4" e	13' 4" e	12' 4" e	12' 4" e	12' 4" e	11' 7" e	11' 7" e	11' 7" e
800S137-33	24	33	15' 5" e	15' 5" e	15' 5" e	13' 4" e	13' 4" e	13' 4" e	11' 11" e	11' 11" e	11' 11" e	10' 11" e	10' 11" e	10' 11" e	10' 1" e	10' 1" e	10' 1" e	9' 5" e	9' 5" e	9' 5" e
800S137-43	12	33	26' 6"	25' 6"	21' 6"	22' 11"	22' 11"	19' 7"	20' 6" e	20' 6" e	18' 2"	18' 9" e	18' 9" e	17' 1" e	17' 4" e	17' 4" e	16' 3" e	16' 3" e	16' 3" e	15' 6" e
800S137-43	16	33	22' 11"	22' 11"	19' 7"	19' 10" e	19' 10" e	17' 9"	17' 9" e	17' 9" e	16' 6" e	16' 3" e	16' 3" e	15' 6" e	15' 0" e	15' 0" e	14' 9" e	14' 1" e	14' 1" e	14' 1" e
800S137-43	24	33	18' 9" e	18' 9" e	17' 1" e	16' 3" e	16' 3" e	15' 6" e	14' 6" e	14' 6" e	14' 5" e	13' 3" e	13' 3" e	13' 3" e	12' 3" e	12' 3" e	12' 3" e	11' 6" e	11' 6" e	11' 6" e

See Curtain Wall Limiting Heights Table Notes on page 25.

Limiting Wall Heights - Curtain Wall

SFIA
STEEL FRAMING INDUSTRY ASSOCIATION

Stud Member	Spacing, in, oc	Fy, ksi	15 psf			20 psf			25 psf			30 psf			35 psf			40 psf		
			L/240	L/360	L/600	L/240	L/360	L/600	L/240	L/360	L/600	L/240	L/360	L/600	L/240	L/360	L/600	L/240	L/360	L/600
800S137-54	12	33	31' 1"	27' 8"	23' 4"	26' 11"	25' 1"	21' 2"	24' 1"	23' 4"	19' 8"	22' 0"	21' 11"	18' 6"	20' 4"	20' 4"	17' 7"	19' 0" e	19' 0" e	16' 10"
800S137-54	16	33	26' 11"	25' 1"	21' 2"	23' 4"	22' 10"	19' 3"	20' 10"	20' 10"	17' 10"	19' 0" e	19' 0" e	16' 10"	17' 8" e	17' 8" e	16' 0"	16' 6" e	16' 6" e	15' 3" e
800S137-54	24	33	22' 0"	21' 11"	18' 6"	19' 0" e	19' 0" e	16' 10"	17' 0" e	17' 0" e	15' 7" e	15' 7" e	15' 7" e	14' 8" e	14' 5" e	14' 5" e	13' 11" e	13' 6" e	13' 6" e	13' 4" e
800S137-54	12	50	31' 5"	27' 6"	23' 2"	28' 7"	24' 11"	21' 1"	26' 6"	23' 2"	19' 6"	24' 11"	21' 10"	18' 5"	23' 4"	20' 8"	17' 6"	21' 9"	19' 10"	16' 8"
800S137-54	16	50	28' 7"	24' 11"	21' 1"	25' 11"	22' 8"	19' 1"	23' 10"	21' 1"	17' 9"	21' 9"	19' 10"	16' 8"	20' 2"	18' 10"	15' 10"	18' 10"	18' 0"	15' 2"
800S137-54	24	50	24' 11"	21' 10"	18' 5"	21' 9"	19' 10"	16' 8"	19' 6"	18' 5"	15' 6"	17' 9"	17' 4"	14' 7"	16' 6" e	16' 5" e	13' 10"	15' 5" e	15' 5" e	13' 3"
800S137-68	12	33	34' 0"	29' 9"	25' 1"	30' 11"	27' 0"	22' 9"	28' 2"	25' 1"	21' 2"	25' 9"	23' 7"	19' 11"	23' 10"	22' 5"	18' 11"	22' 3"	21' 5"	18' 1"
800S137-68	16	33	30' 11"	27' 0"	22' 9"	27' 3"	24' 6"	20' 8"	24' 5"	22' 9"	19' 2"	22' 3"	21' 5"	18' 1"	20' 7"	20' 4"	17' 2"	19' 3"	19' 3"	16' 5"
800S137-68	24	33	25' 9"	23' 7"	19' 11"	22' 3"	21' 5"	18' 1"	19' 11"	19' 11"	16' 9"	18' 2"	18' 2"	15' 9"	16' 10" e	16' 10" e	15' 0"	15' 9" e	15' 9" e	14' 4"
800S137-68	12	50	34' 0"	29' 8"	25' 0"	30' 11"	27' 0"	22' 9"	28' 8"	25' 0"	21' 1"	27' 0"	23' 7"	19' 10"	25' 7"	22' 5"	18' 11"	24' 6"	21' 5"	18' 1"
800S137-68	16	50	30' 11"	27' 0"	22' 9"	28' 1"	24' 6"	20' 8"	26' 0"	22' 9"	19' 2"	24' 6"	21' 5"	18' 1"	23' 3"	20' 4"	17' 2"	22' 3"	19' 5"	16' 5"
800S137-68	24	50	27' 0"	23' 7"	19' 10"	24' 6"	21' 5"	18' 1"	22' 9"	19' 10"	16' 9"	21' 0"	18' 8"	15' 9"	19' 5"	17' 9"	15' 0"	18' 2"	17' 0"	14' 4"
800S137-97	12	33	37' 9"	32' 11"	27' 10"	34' 3"	29' 11"	25' 3"	31' 10"	27' 10"	23' 5"	29' 11"	26' 2"	22' 1"	28' 5"	24' 10"	20' 11"	27' 2"	23' 9"	20' 1"
800S137-97	16	33	34' 3"	29' 11"	25' 3"	31' 2"	27' 2"	22' 11"	28' 11"	25' 3"	21' 4"	27' 2"	23' 9"	20' 1"	25' 10"	22' 7"	19' 0"	24' 9"	21' 7"	18' 3"
800S137-97	24	33	29' 11"	26' 2"	22' 1"	27' 2"	23' 9"	20' 1"	25' 3"	22' 1"	18' 7"	23' 9"	20' 9"	17' 6"	22' 6"	19' 9"	16' 8"	21' 0"	18' 10"	15' 11"
800S137-97	12	50	37' 9"	32' 11"	27' 10"	34' 3"	29' 11"	25' 3"	31' 10"	27' 10"	23' 5"	29' 11"	26' 2"	22' 1"	28' 5"	24' 10"	20' 11"	27' 2"	23' 9"	20' 1"
800S137-97	16	50	34' 3"	29' 11"	25' 3"	31' 2"	27' 2"	22' 11"	28' 11"	25' 3"	21' 4"	27' 2"	23' 9"	20' 1"	25' 10"	22' 7"	19' 0"	24' 9"	21' 7"	18' 3"
800S137-97	24	50	29' 11"	26' 2"	22' 1"	27' 2"	23' 9"	20' 1"	25' 3"	22' 1"	18' 7"	23' 9"	20' 9"	17' 6"	22' 7"	19' 9"	16' 8"	21' 7"	18' 10"	15' 11"
800S162-33	12	33	23' 8" e	23' 8" e	20' 4" e	20' 6" e	20' 6" e	18' 6" e	18' 4" e	18' 4" e	17' 2" e	16' 9" e	16' 9" e	16' 2" e	15' 6" e	15' 6" e	15' 4" e	14' 6" e	14' 6" e	14' 6" e
800S162-33	16	33	20' 6" e	20' 6" e	18' 6" e	17' 9" e	17' 9" e	16' 10" e	15' 11" e	15' 11" e	15' 7" e	14' 6" e	14' 6" e	14' 6" e	13' 5" e	13' 5" e	13' 5" e	12' 7" e	12' 7" e	12' 7" e
800S162-33	24	33	16' 9" e	16' 9" e	16' 2" e	14' 6" e	14' 6" e	14' 6" e	13' 0" e	13' 0" e	13' 0" e	11' 10" e	11' 10" e	11' 10" e	11' 0" e	11' 0" e	11' 0" e	10' 3" e	10' 3" e	10' 3" e
800S162-43	12	33	28' 7"	26' 7"	22' 5"	24' 9" e	24' 2"	20' 4"	22' 1" e	22' 1" e	18' 11"	20' 2" e	20' 2" e	17' 9" e	18' 8" e	18' 8" e	16' 11" e	17' 6" e	17' 6" e	16' 2" e
800S162-43	16	33	24' 9" e	24' 2"	20' 4"	21' 5" e	21' 5" e	18' 6"	19' 2" e	19' 2" e	17' 2" e	17' 6" e	17' 6" e	16' 2" e	16' 2" e	16' 2" e	15' 4" e	15' 2" e	15' 2" e	14' 8" e
800S162-43	24	33	20' 2" e	20' 2" e	17' 9" e	17' 6" e	17' 6" e	16' 2" e	15' 8" e	15' 8" e	15' 0" e	14' 3" e	14' 3" e	14' 1" e	13' 3" e	13' 3" e	13' 3" e	12' 4" e	12' 4" e	12' 4" e
800S162-54	12	33	32' 11"	28' 9"	24' 3"	28' 10"	26' 1"	22' 0"	25' 10"	24' 3"	20' 5"	23' 7"	22' 10"	19' 3"	21' 10" e	21' 8"	18' 3"	20' 5" e	20' 5" e	17' 6"
800S162-54	16	33	28' 10"	26' 1"	22' 0"	25' 0"	23' 9"	20' 0"	22' 4"	22' 0"	18' 7"	20' 5" e	20' 5" e	17' 6"	18' 11" e	18' 11" e	16' 7" e	17' 8" e	17' 8" e	15' 11" e
800S162-54	24	33	23' 7"	22' 10"	19' 3"	20' 5" e	20' 5" e	17' 6"	18' 3" e	18' 3" e	16' 3" e	16' 8" e	16' 8" e	15' 3" e	15' 5" e	15' 5" e	14' 6" e	14' 5" e	14' 5" e	13' 10" e
800S162-54	12	50	32' 8"	28' 7"	24' 1"	29' 9"	25' 11"	21' 11"	27' 7"	24' 1"	20' 4"	25' 11"	22' 8"	19' 1"	24' 8"	21' 6"	18' 2"	23' 5"	20' 7"	17' 4"
800S162-54	16	50	29' 9"	25' 11"	21' 11"	27' 0"	23' 7"	19' 11"	25' 1"	21' 11"	18' 6"	23' 5"	20' 7"	17' 4"	21' 8"	19' 7"	16' 6"	20' 3"	18' 9"	15' 9"
800S162-54	24	50	25' 11"	22' 8"	19' 1"	23' 5"	20' 7"	17' 4"	20' 11"	19' 1"	16' 2"	19' 1"	18' 0"	15' 2"	17' 8" e	17' 1" e	14' 5"	16' 6" e	16' 4" e	13' 9"
800S162-68	12	33	35' 4"	30' 11"	26' 1"	32' 2"	28' 1"	23' 8"	29' 10"	26' 1"	22' 0"	27' 5"	24' 6"	20' 8"	25' 5"	23' 4"	19' 8"	23' 9"	22' 3"	18' 10"
800S162-68	16	33	32' 2"	28' 1"	23' 8"	29' 1"	25' 6"	21' 6"	26' 0"	23' 8"	20' 0"	23' 9"	22' 3"	18' 10"	22' 0"	21' 2"	17' 10"	20' 7"	20' 3"	17' 1"
800S162-68	24	33	27' 5"	24' 6"	20' 8"	23' 9"	22' 3"	18' 10"	21' 3"	20' 8"	17' 5"	19' 5"	19' 5"	16' 5"	17' 11" e	17' 11" e	15' 7"	16' 10" e	16' 10" e	14' 11" e
800S162-68	12	50	35' 4"	30' 10"	26' 0"	32' 1"	28' 1"	23' 8"	29' 10"	26' 0"	22' 0"	28' 1"	24' 6"	20' 8"	26' 8"	23' 3"	19' 8"	25' 6"	22' 3"	18' 9"
800S162-68	16	50	32' 1"	28' 1"	23' 8"	29' 2"	25' 6"	21' 6"	27' 1"	23' 8"	19' 11"	25' 6"	22' 3"	18' 9"	24' 3"	21' 2"	17' 10"	23' 2"	20' 3"	17' 1"
800S162-68	24	50	28' 1"	24' 6"	20' 8"	25' 6"	22' 3"	18' 9"	23' 8"	20' 8"	17' 5"	22' 3"	19' 5"	16' 5"	20' 9"	18' 6"	15' 7"	19' 5"	17' 8"	14' 11"
800S162-97	12	33	39' 3"	34' 4"	28' 11"	35' 8"	31' 2"	26' 4"	33' 2"	28' 11"	24' 5"	31' 2"	27' 3"	23' 0"	29' 7"	25' 11"	21' 10"	28' 4"	24' 9"	20' 11"
800S162-97	16	33	35' 8"	31' 2"	26' 4"	32' 5"	28' 4"	23' 11"	30' 1"	26' 4"	22' 2"	28' 4"	24' 9"	20' 11"	26' 11"	23' 6"	19' 10"	25' 9"	22' 6"	19' 0"
800S162-97	24	33	31' 2"	27' 3"	23' 0"	28' 4"	24' 9"	20' 11"	26' 4"	23' 0"	19' 5"	24' 9"	21' 7"	18' 3"	23' 6"	20' 6"	17' 4"	22' 0"	19' 8"	16' 7"
800S162-97	12	50	39' 3"	34' 4"	28' 11"	35' 8"	31' 2"	26' 4"	33' 2"	28' 11"	24' 5"	31' 2"	27' 3"	23' 0"	29' 7"	25' 11"	21' 10"	28' 4"	24' 9"	20' 11"
800S162-97	16	50	35' 8"	31' 2"	26' 4"	32' 5"	28' 4"	23' 11"	30' 1"	26' 4"	22' 2"	28' 4"	24' 9"	20' 11"	26' 11"	23' 6"	19' 10"	25' 9"	22' 6"	19' 0"
800S162-97	24	50	31' 2"	27' 3"	23' 0"	28' 4"	24' 9"	20' 11"	26' 4"	23' 0"	19' 5"	24' 9"	21' 7"	18' 3"	23' 6"	20' 6"	17' 4"	22' 6"	19' 8"	16' 7"
800S162-118	12	33	41' 7"	36' 4"	30' 8"	37' 9"	33' 0"	27' 10"	35' 1"	30' 8"	25' 10"	33' 0"	28' 10"	24' 4"	31' 4"	27' 5"	23' 1"	30' 0"	26' 2"	22' 1"
800S162-118	16	33	37' 9"	33' 0"	27' 10"	34' 4"	30' 0"	25' 3"	31' 10"	27' 10"	23' 6"	30' 0"	26' 2"	22' 1"	28' 6"	24' 11"	21' 0"	27' 3"	23' 10"	20' 1"
800S162-118	24	33	33' 0"	28' 10"	24' 4"	30' 0"	26' 2"	22' 1"	27' 10"	24' 4"	20' 6"	26' 2"	22' 11"	19' 4"	24' 11"	21' 9"	18' 4"	23' 10"	20' 9"	17' 6"
800S162-118	12	50	41' 7"	36' 4"	30' 8"	37' 9"	33' 0"	27' 10"	35' 1"	30' 8"	25' 10"	33' 0"	28' 10"	24' 4"	31' 4"	27' 5"	23' 1"	30' 0"	26' 2"	22' 1"
800S162-118	16	50	37' 9"	33' 0"	27' 10"	34' 4"	30' 0"	25' 3"	31' 10"	27' 10"	23' 6"	30' 0"	26' 2"	22' 1"	28' 6"	24' 11"	21' 0"	27' 3"	23' 10"	20' 1"
800S162-118	24	50	33' 0"	28' 10"	24' 4"	30' 0"	26' 2"	22' 1"	27' 10"	24' 4"	20' 6"	26' 2"	22' 11"	19' 4"	24' 11"	21' 9"	18' 4"	23' 10"	20' 9"	17' 6"
800S200-33	12	33	25' 5" e	25' 5" e	21' 8" e	22' 0" e	22' 0" e	19' 9" e	19' 8" e	19' 8" e	18' 4" e	18' 0" e	18' 0" e	17' 3" e	16' 8" e	16' 8" e	16' 4" e	15' 7" e	15' 7" e	15' 7" e
800S200-33	16	33	22' 0" e	22' 0" e	19' 9" e	19' 1" e	19' 1" e	17' 11" e	17' 1" e	17' 1" e	16' 8" e	15' 7" e	15' 7" e	15' 7" e	14' 5" e	14' 5" e	14' 5" e	13' 6" e	13' 6" e	13' 6" e
800S200-33	24	33	18' 0" e	18' 0" e	17' 3" e	15' 7" e	15' 7" e	15' 7" e	13' 11" e	13' 11" e	13' 11" e	12' 8" e	12' 8" e	12' 8" e	11' 9" e	11' 9" e	11' 9" e	11' 0" e	11' 0" e	11' 0" e
800S200-43	12	33	30' 7"	28' 1"	23' 8"	26' 5" e	25' 6" e	21' 6"	23' 8" e	23' 8" e	19' 11" e	21' 7" e	21' 7" e	18' 9" e	20' 0" e	20' 0" e	17' 10" e	18' 8" e	18' 8" e	17' 1" e
800S200-43	16	33	26' 5" e	25' 6" e	21' 6"	22' 11" e	22' 11" e	19' 6" e	20' 6" e	20' 6" e	18' 2" e	18' 8" e	18' 8" e	17' 1" e	17' 4" e	17' 4" e	16' 2" e	16' 2" e	16' 2" e	15' 6" e
800S200-43	24	33	21' 7" e	21' 7" e	18' 9" e	18' 8" e	18' 8" e	17' 1" e	16' 9" e	16' 9" e	15' 10" e	15' 3" e	15' 3" e	14' 11" e	14' 2" e	14' 2" e	14' 2" e	13' 3" e	13' 3" e	13' 3" e
800S200-54	12	33	34' 6"	30' 2"	25' 5"	31' 4"	27' 5"	23' 1"	28' 6"	25' 5"	21' 5"	26' 0" e	23' 11"	20' 2"	24' 1" e	22' 9" e	19' 2"	22' 6" e	21' 9" e	18' 4"
800S200-54	16	33	31' 4"	27' 5"	23' 1"	27' 7"	24' 10"	21' 0"	24' 8" e	23' 1" e	19' 6"	22' 6" e	21' 9" e	18' 4"	20' 10" e	20' 8" e	17' 5" e	19' 6" e	19' 6" e	16' 8" e
800S200-54	24	33	26' 0" e	23' 11"	20' 2"	22' 6" e	21' 9" e	18' 4"	20' 2" e	20' 2" e	17' 0" e	18' 4" e	18' 4" e	16' 0" e	17' 0" e	17' 0" e	15' 2" e	15' 11" e	15' 11" e	14' 7" e
800S200-54	12	50	34' 6"	30' 2"	25' 5"	31' 4"	27' 5"	23' 1"	29' 1"	25' 5"	21' 5"	27' 5"	23' 11"	20' 2"	26' 0"	22' 9"	19' 2"	24' 10"	21' 9"	18' 4"
800S200-54	16	50	31' 4"	27' 5"	23' 1"	28' 6"	24' 10"	21' 0"	26' 5"	23' 1"	19' 6"	24' 10"	21' 9"	18' 4"	23' 1"	20' 8"	17' 5"	21' 7" e	19' 9"	16' 8"
800S200-54	24	50	27' 5"	23' 11"	20' 2"	24' 10"	21' 9"	18' 4"	22' 4"	20' 2"	17' 0"	20' 5" e	19' 0"	16' 0"	18' 10" e	18' 0" e	15' 2"	17' 8" e	17' 3" e	14' 7" e
800S200-68	12	33	37' 1"	32' 4"	27' 4"	33' 8"	29' 5"	24' 10"	31' 3"	27' 4"	23' 0"	29' 5"	25' 8"	21' 8"	27' 11"	24' 5"	20' 7"	26' 5"	23' 4"	19' 8"
800S200-68	16	33	33' 8"	29' 5"	24' 10"	30' 7"	26' 9"	22' 6"	28' 5"	24' 10"	20' 11"	26' 5"	23' 4"	19' 8"	24' 5"	22' 2"	18' 8"	22' 10" e	21' 2"	17' 11"
800S200-68	24	33	29' 5"	25' 8"	21' 8"	26' 5"	23' 4"	19' 8"	23' 7" e	21' 8"	18' 3"	21' 7" e	20' 5" e	17' 2"	19' 11" e	19' 4" e	16' 4"	18' 8" e	18' 6" e	15' 7" e
800S200-68	12	50	37' 1"	32' 4"	27' 4"	33' 8"	29' 5"	24' 10"	31' 3"	27' 4"	23' 0"	29' 5"	25' 8"	21' 8"	27' 11"	24' 5"	20' 7"	26' 9"	23' 4"	19' 8"
800S200-68	16	50	33' 8"	29' 5"	24' 10"	30' 7"	26' 9"	22' 6"	28' 5"	24' 10"	20' 11"	26' 9"	23' 4"	19' 8"	25' 4"	22' 2"	18' 8"	24' 3"	21' 2"	17' 11"
800S200-68	24	50	29' 5"	25' 8"	21' 8"	26' 9"	23' 4"	19' 8"	24' 10"	21' 8"	18' 3"	23' 4"	20' 5"	17' 2"	22' 2"	19' 4"	16' 4"	21' 2"	18' 6"	15' 7"

See Curtain Wall Limiting Heights Table Notes on page 25.

Limiting Wall Heights - Curtain Wall

SFIA
STEEL FRAMING INDUSTRY ASSOCIATION

Stud Member	Spacing, in, oc	Fy, ksi	15 psf			20 psf			25 psf			30 psf			35 psf			40 psf		
			L/240	L/360	L/600	L/240	L/360	L/600	L/240	L/360	L/600	L/240	L/360	L/600	L/240	L/360	L/600	L/240	L/360	L/600
800S200-97	12	33	41' 2"	36' 0"	30' 4"	37' 5"	32' 8"	27' 7"	34' 9"	30' 4"	25' 7"	32' 8"	28' 7"	24' 1"	31' 1"	27' 2"	22' 11"	29' 9"	25' 11"	21' 11"
800S200-97	16	33	37' 5"	32' 8"	27' 7"	34' 0"	29' 9"	25' 1"	31' 7"	27' 7"	23' 3"	29' 9"	25' 11"	21' 11"	28' 3"	24' 8"	20' 10"	27' 0"	23' 7"	19' 11"
800S200-97	24	33	32' 8"	28' 7"	24' 1"	29' 9"	25' 11"	21' 11"	27' 7"	24' 1"	20' 4"	25' 11"	22' 8"	19' 1"	24' 8"	21' 6"	18' 2"	23' 4"	20' 7"	17' 5"
800S200-97	12	50	41' 2"	36' 0"	30' 4"	37' 5"	32' 8"	27' 7"	34' 9"	30' 4"	25' 7"	32' 8"	28' 7"	24' 1"	31' 1"	27' 2"	22' 11"	29' 9"	25' 11"	21' 11"
800S200-97	16	50	37' 5"	32' 8"	27' 7"	34' 0"	29' 9"	25' 1"	31' 7"	27' 7"	23' 3"	29' 9"	25' 11"	21' 11"	28' 3"	24' 8"	20' 10"	27' 0"	23' 7"	19' 11"
800S200-97	24	50	32' 8"	28' 7"	24' 1"	29' 9"	25' 11"	21' 11"	27' 7"	24' 1"	20' 4"	25' 11"	22' 8"	19' 1"	24' 8"	21' 6"	18' 2"	23' 7"	20' 7"	17' 5"
800S200-118	12	33	43' 8"	38' 2"	32' 2"	39' 8"	34' 8"	29' 3"	36' 10"	32' 2"	27' 1"	34' 8"	30' 3"	25' 6"	32' 11"	28' 9"	24' 3"	31' 6"	27' 6"	23' 2"
800S200-118	16	33	39' 8"	34' 8"	29' 3"	36' 0"	31' 6"	26' 7"	33' 5"	29' 3"	24' 8"	31' 6"	27' 6"	23' 2"	29' 11"	26' 1"	22' 0"	28' 7"	25' 0"	21' 1"
800S200-118	24	33	34' 8"	30' 3"	25' 6"	31' 6"	27' 6"	23' 2"	29' 3"	25' 6"	21' 6"	27' 6"	24' 0"	20' 3"	26' 1"	22' 10"	19' 3"	25' 0"	21' 10"	18' 5"
800S200-118	12	50	43' 8"	38' 2"	32' 2"	39' 8"	34' 8"	29' 3"	36' 10"	32' 2"	27' 1"	34' 8"	30' 3"	25' 6"	32' 11"	28' 9"	24' 3"	31' 6"	27' 6"	23' 2"
800S200-118	16	50	39' 8"	34' 8"	29' 3"	36' 0"	31' 6"	26' 7"	33' 5"	29' 3"	24' 8"	31' 6"	27' 6"	23' 2"	29' 11"	26' 1"	22' 0"	28' 7"	25' 0"	21' 1"
800S200-118	24	50	34' 8"	30' 3"	25' 6"	31' 6"	27' 6"	23' 2"	29' 3"	25' 6"	21' 6"	27' 6"	24' 0"	20' 3"	26' 1"	22' 10"	19' 3"	25' 0"	21' 10"	18' 5"
800S250-43	12	33	31' 4"	29' 3"	24' 8"	27' 1" e	26' 7" e	22' 5"	24' 3" e	24' 3" e	20' 10" e	22' 2" e	22' 2" e	19' 7" e	20' 6" e	20' 6" e	18' 7" e	19' 2" e	19' 2" e	17' 10" e
800S250-43	16	33	27' 1" e	26' 7" e	22' 5"	23' 6" e	23' 6" e	20' 4" e	21' 0" e	21' 0" e	18' 11" e	19' 2" e	19' 2" e	17' 10" e	17' 9" e	17' 9" e	16' 11" e	16' 7" e	16' 7" e	16' 2" e
800S250-43	24	33	22' 2" e	22' 2" e	19' 7" e	19' 2" e	19' 2" e	17' 10" e	17' 2" e	17' 2" e	16' 6" e	15' 8" e	15' 8" e	15' 7" e	14' 6" e	14' 6" e	14' 6" e	13' 7" e	13' 7" e	13' 7" e
800S250-54	12	33	36' 0"	31' 5"	26' 6"	31' 8"	28' 7"	24' 1"	28' 4"	26' 6"	22' 4"	25' 10" e	24' 11"	21' 1"	23' 11" e	23' 8" e	20' 0"	22' 5" e	22' 5" e	19' 1" e
800S250-54	16	33	31' 8"	28' 7"	24' 1"	27' 5"	25' 11"	21' 11"	24' 6" e	24' 1" e	20' 4"	22' 5" e	22' 5" e	19' 1" e	20' 9" e	20' 9" e	18' 2" e	19' 5" e	19' 5" e	17' 4" e
800S250-54	24	33	25' 10" e	24' 11"	21' 1"	22' 5" e	22' 5" e	19' 1" e	20' 0" e	20' 0" e	17' 9" e	18' 3" e	18' 3" e	16' 8" e	16' 11" e	16' 11" e	15' 10" e	15' 10" e	15' 10" e	15' 2" e
800S250-54	12	50	35' 10"	31' 4"	26' 5"	32' 7"	28' 5"	24' 0"	30' 3"	26' 5"	22' 3"	28' 5"	24' 10"	21' 0"	27' 0"	23' 7"	19' 11"	25' 7"	22' 7"	19' 1"
800S250-54	16	50	32' 7"	28' 5"	24' 0"	29' 7"	25' 10"	21' 10"	27' 6"	24' 0"	20' 3"	25' 7"	22' 7"	19' 1"	23' 8"	21' 5"	18' 1"	22' 1" e	20' 6"	17' 4"
800S250-54	24	50	28' 5"	24' 10"	21' 0"	25' 7"	22' 7"	19' 1"	22' 10"	21' 0"	17' 8"	20' 10" e	19' 9" e	16' 8"	19' 4" e	18' 9" e	15' 10"	18' 1" e	17' 11" e	15' 1" e
800S250-68	12	33	38' 8"	33' 9"	28' 6"	35' 2"	30' 8"	25' 11"	32' 7"	28' 6"	24' 0"	30' 8"	26' 10"	22' 7"	28' 10"	25' 6"	21' 6"	27' 0"	24' 4"	20' 7"
800S250-68	16	33	35' 2"	30' 8"	25' 11"	31' 11"	27' 11"	23' 6"	29' 7"	25' 11"	21' 10"	27' 0"	24' 4"	20' 7"	25' 0" e	23' 2"	19' 6"	23' 4" e	22' 2" e	18' 8"
800S250-68	24	33	30' 8"	26' 10"	22' 7"	27' 0"	24' 4"	20' 7"	24' 1" e	22' 7"	19' 1"	22' 0" e	21' 3" e	17' 11"	20' 5" e	20' 3" e	17' 1" e	19' 1" e	19' 1" e	16' 4" e
800S250-68	12	50	38' 8"	33' 9"	28' 6"	35' 1"	30' 8"	25' 10"	32' 7"	28' 6"	24' 0"	30' 8"	26' 10"	22' 7"	29' 2"	25' 5"	21' 6"	27' 10"	24' 4"	20' 6"
800S250-68	16	50	35' 1"	30' 8"	25' 10"	31' 11"	27' 10"	23' 6"	29' 7"	25' 10"	21' 10"	27' 10"	24' 4"	20' 6"	26' 6"	23' 1"	19' 6"	25' 4"	22' 1"	18' 8"
800S250-68	24	50	30' 8"	26' 10"	22' 7"	27' 10"	24' 4"	20' 6"	25' 10"	22' 7"	19' 1"	24' 4"	21' 3"	17' 11"	22' 8"	20' 2"	17' 0"	21' 2"	19' 4"	16' 4"
800S250-97	12	33	43' 1"	37' 7"	31' 9"	39' 2"	34' 2"	28' 10"	36' 4"	31' 9"	26' 9"	34' 2"	29' 10"	25' 2"	32' 6"	28' 4"	23' 11"	31' 1"	27' 2"	22' 11"
800S250-97	16	33	39' 2"	34' 2"	28' 10"	35' 7"	31' 1"	26' 2"	33' 0"	28' 10"	24' 4"	31' 1"	27' 2"	22' 11"	29' 6"	25' 9"	21' 9"	28' 3"	24' 8"	20' 9"
800S250-97	24	33	34' 2"	29' 10"	25' 2"	31' 1"	27' 2"	22' 11"	28' 10"	25' 2"	21' 3"	27' 2"	23' 8"	20' 0"	25' 9"	22' 6"	19' 0"	24' 3"	21' 6"	18' 2"
800S250-97	12	50	43' 1"	37' 7"	31' 9"	39' 2"	34' 2"	28' 10"	36' 4"	31' 9"	26' 9"	34' 2"	29' 10"	25' 2"	32' 6"	28' 4"	23' 11"	31' 1"	27' 2"	22' 11"
800S250-97	16	50	39' 2"	34' 2"	28' 10"	35' 7"	31' 1"	26' 2"	33' 0"	28' 10"	24' 4"	31' 1"	27' 2"	22' 11"	29' 6"	25' 9"	21' 9"	28' 3"	24' 8"	20' 9"
800S250-97	24	50	34' 2"	29' 10"	25' 2"	31' 1"	27' 2"	22' 11"	28' 10"	25' 2"	21' 3"	27' 2"	23' 8"	20' 0"	25' 9"	22' 6"	19' 0"	24' 8"	21' 6"	18' 2"
800S250-118	12	33	45' 8"	39' 11"	33' 8"	41' 6"	36' 3"	30' 7"	38' 6"	33' 8"	28' 4"	36' 3"	31' 8"	26' 8"	34' 5"	30' 1"	25' 4"	32' 11"	28' 9"	24' 3"
800S250-118	16	33	41' 6"	36' 3"	30' 7"	37' 8"	32' 11"	27' 9"	35' 0"	30' 7"	25' 9"	32' 11"	28' 9"	24' 3"	31' 3"	27' 4"	23' 1"	29' 11"	26' 2"	22' 0"
800S250-118	24	33	36' 3"	31' 8"	26' 8"	32' 11"	28' 9"	24' 3"	30' 7"	26' 8"	22' 6"	28' 9"	25' 2"	21' 2"	27' 4"	23' 10"	20' 2"	26' 2"	22' 10"	19' 3"
800S250-118	12	50	45' 8"	39' 11"	33' 8"	41' 6"	36' 3"	30' 7"	38' 6"	33' 8"	28' 4"	36' 3"	31' 8"	26' 8"	34' 5"	30' 1"	25' 4"	32' 11"	28' 9"	24' 3"
800S250-118	16	50	41' 6"	36' 3"	30' 7"	37' 8"	32' 11"	27' 9"	35' 0"	30' 7"	25' 9"	32' 11"	28' 9"	24' 3"	31' 3"	27' 4"	23' 1"	29' 11"	26' 2"	22' 0"
800S250-118	24	50	36' 3"	31' 8"	26' 8"	32' 11"	28' 9"	24' 3"	30' 7"	26' 8"	22' 6"	28' 9"	25' 2"	21' 2"	27' 4"	23' 10"	20' 2"	26' 2"	22' 10"	19' 3"
800S300-54	12	33	37' 2"	32' 6"	27' 5"	32' 3"	29' 6"	24' 11"	28' 10"	27' 5"	23' 1"	26' 4" e	25' 10" e	21' 9"	24' 4" e	24' 4" e	20' 8"	22' 9" e	22' 9" e	19' 9" e
800S300-54	16	33	32' 3"	29' 6"	24' 11"	27' 11"	26' 10"	22' 8"	24' 11" e	24' 11" e	21' 0"	22' 9" e	22' 9" e	19' 9" e	21' 1" e	21' 1" e	18' 9" e	19' 9" e	19' 9" e	18' 0" e
800S300-54	24	33	26' 4" e	25' 10" e	21' 9"	22' 9" e	22' 9" e	19' 9" e	20' 5" e	20' 5" e	18' 4" e	18' 7" e	18' 7" e	17' 3" e	17' 3" e	17' 3" e	16' 5" e	16' 1" e	16' 1" e	15' 8" e
800S300-54	12	50	36' 7"	32' 0"	27' 0"	33' 3"	29' 1"	24' 6"	30' 11"	27' 0"	22' 9"	29' 1"	25' 5"	21' 5"	27' 7"	24' 1"	20' 4"	25' 11"	23' 1"	19' 5"
800S300-54	16	50	33' 3"	29' 1"	24' 6"	30' 3"	26' 5"	22' 3"	28' 1"	24' 6"	20' 8"	25' 11"	23' 1"	19' 5"	24' 0"	21' 11"	18' 6"	22' 5" e	20' 11"	17' 8"
800S300-54	24	50	29' 1"	25' 5"	21' 5"	25' 11"	23' 1"	19' 5"	23' 2" e	21' 5"	18' 1"	21' 2" e	20' 2" e	17' 0"	19' 7" e	19' 2" e	16' 2"	18' 4" e	18' 4" e	15' 5" e
800S300-68	12	33	40' 2"	35' 1"	29' 7"	36' 6"	31' 10"	26' 10"	33' 8"	29' 7"	24' 11"	30' 9"	27' 10"	23' 6"	28' 6"	26' 5"	22' 4"	26' 8"	25' 3"	21' 4"
800S300-68	16	33	36' 6"	31' 10"	26' 10"	32' 7"	28' 11"	24' 5"	29' 2"	26' 10"	22' 8"	26' 8"	25' 3"	21' 4"	24' 8"	24' 0"	20' 3"	23' 1" e	23' 0" e	19' 4"
800S300-68	24	33	30' 9"	27' 10"	23' 6"	26' 8"	25' 3"	21' 4"	23' 10" e	23' 6" e	19' 10"	21' 9" e	21' 9" e	18' 8"	20' 2" e	20' 2" e	17' 8" e	18' 10" e	18' 10" e	16' 11" e
800S300-68	12	50	39' 9"	34' 9"	29' 4"	36' 2"	31' 7"	26' 8"	33' 7"	29' 4"	24' 9"	31' 7"	27' 7"	23' 3"	30' 0"	26' 2"	22' 1"	28' 8"	25' 1"	21' 2"
800S300-68	16	50	36' 2"	31' 7"	26' 8"	32' 10"	28' 8"	24' 2"	30' 6"	26' 8"	22' 6"	28' 8"	25' 1"	21' 2"	27' 3"	23' 10"	20' 1"	26' 1"	22' 9"	19' 2"
800S300-68	24	50	31' 7"	27' 7"	23' 3"	28' 8"	25' 1"	21' 2"	26' 8"	23' 3"	19' 7"	24' 10"	21' 11"	18' 6"	23' 0"	20' 10"	17' 6"	21' 6"	19' 11"	16' 9"
800S300-97	12	33	44' 9"	39' 1"	33' 0"	40' 8"	35' 6"	30' 0"	37' 9"	33' 0"	27' 10"	35' 6"	31' 1"	26' 2"	33' 9"	29' 6"	24' 10"	32' 3"	28' 2"	23' 9"
800S300-97	16	33	40' 8"	35' 6"	30' 0"	37' 0"	32' 3"	27' 3"	34' 4"	30' 0"	25' 3"	32' 3"	28' 2"	23' 9"	30' 8"	26' 10"	22' 7"	29' 4"	25' 8"	21' 7"
800S300-97	24	33	35' 6"	31' 1"	26' 2"	32' 3"	28' 2"	23' 9"	30' 0"	26' 2"	22' 1"	28' 2"	24' 8"	20' 9"	26' 5"	23' 5"	19' 9"	24' 9"	22' 5"	18' 11"
800S300-97	12	50	44' 7"	38' 11"	32' 10"	40' 6"	35' 4"	29' 10"	37' 7"	32' 10"	27' 8"	35' 4"	30' 11"	26' 1"	33' 7"	29' 4"	24' 9"	32' 2"	28' 1"	23' 8"
800S300-97	16	50	40' 6"	35' 4"	29' 10"	36' 9"	32' 2"	27' 1"	34' 2"	29' 10"	25' 2"	32' 2"	28' 1"	23' 8"	30' 6"	26' 8"	22' 6"	29' 2"	25' 6"	21' 6"
800S300-97	24	50	35' 4"	30' 11"	26' 1"	32' 2"	28' 1"	23' 8"	29' 10"	26' 1"	22' 0"	28' 1"	24' 6"	20' 8"	26' 8"	23' 4"	19' 8"	25' 6"	22' 3"	18' 10"
800S300-118	12	33	47' 6"	41' 6"	35' 0"	43' 2"	37' 8"	31' 10"	40' 1"	35' 0"	29' 6"	37' 8"	32' 11"	27' 9"	35' 10"	31' 3"	26' 5"	34' 3"	29' 11"	25' 3"
800S300-118	16	33	43' 2"	37' 8"	31' 10"	39' 3"	34' 3"	28' 11"	36' 5"	31' 10"	26' 10"	34' 3"	29' 11"	25' 3"	32' 6"	28' 5"	24' 0"	31' 1"	27' 2"	22' 11"
800S300-118	24	33	37' 8"	32' 11"	27' 9"	34' 3"	29' 11"	25' 3"	31' 10"	27' 9"	23' 5"	29' 11"	26' 2"	22' 1"	28' 5"	24' 10"	20' 11"	27' 2"	23' 9"	20' 0"
800S300-118	12	50	47' 4"	41' 5"	34' 11"	43' 0"	37' 7"	31' 8"	39' 11"	34' 11"	29' 5"	37' 7"	32' 10"	27' 8"	35' 9"	31' 2"	26' 4"	34' 2"	29' 10"	25' 2"
800S300-118	16	50	43' 0"	37' 7"	31' 8"	39' 1"	34' 2"	28' 10"	36' 4"	31' 8"	26' 9"	34' 2"	29' 10"	25' 2"	32' 5"	28' 4"	23' 11"	31' 0"	27' 1"	22' 10"
800S300-118	24	50	37' 7"	32' 10"	27' 8"	34' 2"	29' 10"	25' 2"	31' 8"	27' 8"	23' 4"	29' 10"	26' 1"	22' 0"	28' 4"	24' 9"	20' 11"	27' 1"	23' 8"	20' 0"
800S350-54	12	33	39' 0"	34' 1"	28' 9"	35' 5"	30' 11"	26' 1"	31' 11" e	28' 9"	24' 3"	29' 2" e	27' 0" e	22' 9"	27' 0" e	25' 8" e	21' 8"	25' 3" e	24' 7" e	20' 8" e
800S350-54	16	33	35' 5"	30' 11"	26' 1"	30' 11" e	28' 1"	23' 8"	27' 8" e	26' 1" e	22' 0"	25' 3" e	24' 7" e	20' 8" e	23' 5" e	23' 4" e	19' 8" e	21' 11" e	21' 11" e	18' 10" e
800S350-54	24	33	29' 2" e	27' 0" e	22' 9"	25' 3" e	24' 7" e	20' 8" e	22' 7" e	22' 7" e	19' 3" e	20' 8" e	20' 8" e	18' 1" e	19' 1" e	19' 1" e	17' 2" e	17' 10" e	17' 10" e	16' 5" e

See Curtain Wall Limiting Heights Table Notes on page 25.

Limiting Wall Heights - Curtain Wall

Stud Member	Spacing, in, oc	Fy, ksi	15 psf			20 psf			25 psf			30 psf			35 psf			40 psf		
			L/240	L/360	L/600	L/240	L/360	L/600	L/240	L/360	L/600	L/240	L/360	L/600	L/240	L/360	L/600	L/240	L/360	L/600
800S350-54	12	50	38' 7"	33' 8"	28' 5"	35' 1"	30' 7"	25' 10"	32' 6"	28' 5"	24' 0"	30' 7"	26' 9"	22' 7"	29' 1"	25' 5"	21' 5"	27' 10"	24' 4"	20' 6"
800S350-54	16	50	35' 1"	30' 7"	25' 10"	31' 10"	27' 10"	23' 6"	29' 7"	25' 10"	21' 9"	27' 10"	24' 4"	20' 6"	26' 5" e	23' 1"	19' 6"	24' 11" e	22' 1" e	18' 7"
800S350-54	24	50	30' 7"	26' 9"	22' 7"	27' 10"	24' 4"	20' 6"	25' 9" e	22' 7"	19' 0"	23' 6" e	21' 3" e	17' 11"	21' 9" e	20' 2" e	17' 0" e	20' 4" e	19' 3" e	16' 3" e
800S350-68	12	33	42' 3"	36' 10"	31' 1"	38' 4"	33' 6"	28' 3"	35' 7"	31' 1"	26' 3"	33' 6"	29' 3"	24' 8"	31' 5"	27' 10"	23' 5"	29' 5" e	26' 7"	22' 5"
800S350-68	16	33	38' 4"	33' 6"	28' 3"	34' 10"	30' 5"	25' 8"	32' 3"	28' 3"	23' 10"	29' 5" e	26' 7"	22' 5"	27' 3" e	25' 3" e	21' 4"	25' 6" e	24' 2" e	20' 5"
800S350-68	24	33	33' 6"	29' 3"	24' 8"	29' 5" e	26' 7"	22' 5"	26' 4" e	24' 8" e	20' 10"	24' 0" e	23' 3" e	19' 7" e	22' 3" e	22' 1" e	18' 7" e	20' 10" e	20' 10" e	17' 10" e
800S350-68	12	50	42' 1"	36' 9"	31' 0"	38' 2"	33' 5"	28' 2"	35' 6"	31' 0"	26' 2"	33' 5"	29' 2"	24' 7"	31' 8"	27' 8"	23' 4"	30' 4"	26' 6"	22' 4"
800S350-68	16	50	38' 2"	33' 5"	28' 2"	34' 9"	30' 4"	25' 7"	32' 3"	28' 2"	23' 9"	30' 4"	26' 6"	22' 4"	28' 10"	25' 2"	21' 3"	27' 7"	24' 1"	20' 4"
800S350-68	24	50	33' 5"	29' 2"	24' 7"	30' 4"	26' 6"	22' 4"	28' 2"	24' 7"	20' 9"	26' 6"	23' 2"	19' 6"	25' 2"	22' 0"	18' 6"	23' 10" e	21' 0"	17' 9"
800S350-97	12	33	47' 1"	41' 2"	34' 8"	42' 10"	37' 5"	31' 6"	39' 9"	34' 8"	29' 3"	37' 5"	32' 8"	27' 7"	35' 6"	31' 0"	26' 2"	34' 0"	29' 8"	25' 0"
800S350-97	16	33	42' 10"	37' 5"	31' 6"	38' 11"	34' 0"	28' 8"	36' 1"	31' 6"	26' 7"	34' 0"	29' 8"	25' 0"	32' 3"	28' 2"	23' 9"	30' 10"	27' 0"	22' 9"
800S350-97	24	33	37' 5"	32' 8"	27' 7"	34' 0"	29' 8"	25' 0"	31' 6"	27' 7"	23' 3"	29' 8"	25' 11"	21' 10"	28' 2"	24' 7"	20' 9"	27' 0"	23' 7"	19' 10"
800S350-97	12	50	47' 1"	41' 2"	34' 8"	42' 10"	37' 5"	31' 6"	39' 9"	34' 8"	29' 3"	37' 5"	32' 8"	27' 7"	35' 6"	31' 0"	26' 2"	34' 0"	29' 8"	25' 0"
800S350-97	16	50	42' 10"	37' 5"	31' 6"	38' 11"	34' 0"	28' 8"	36' 1"	31' 6"	26' 7"	34' 0"	29' 8"	25' 0"	32' 3"	28' 2"	23' 9"	30' 10"	27' 0"	22' 9"
800S350-97	24	50	37' 5"	32' 8"	27' 7"	34' 0"	29' 8"	25' 0"	31' 6"	27' 7"	23' 3"	29' 8"	25' 11"	21' 10"	28' 2"	24' 7"	20' 9"	27' 0"	23' 7"	19' 10"
800S350-118	12	33	50' 0"	43' 8"	36' 10"	45' 5"	39' 8"	33' 6"	42' 2"	36' 10"	31' 1"	39' 8"	34' 8"	29' 3"	37' 9"	32' 11"	27' 9"	36' 1"	31' 6"	26' 7"
800S350-118	16	33	45' 5"	39' 8"	33' 6"	41' 3"	36' 1"	30' 5"	38' 4"	33' 6"	28' 3"	36' 1"	31' 6"	26' 7"	34' 3"	29' 11"	25' 3"	32' 9"	28' 8"	24' 2"
800S350-118	24	33	39' 8"	34' 8"	29' 3"	36' 1"	31' 6"	26' 7"	33' 6"	29' 3"	24' 8"	31' 6"	27' 6"	23' 3"	29' 11"	26' 2"	22' 1"	28' 8"	25' 0"	21' 1"
800S350-118	12	50	50' 0"	43' 8"	36' 10"	45' 5"	39' 8"	33' 6"	42' 2"	36' 10"	31' 1"	39' 8"	34' 8"	29' 3"	37' 9"	32' 11"	27' 9"	36' 1"	31' 6"	26' 7"
800S350-118	16	50	45' 5"	39' 8"	33' 6"	41' 3"	36' 1"	30' 5"	38' 4"	33' 6"	28' 3"	36' 1"	31' 6"	26' 7"	34' 3"	29' 11"	25' 3"	32' 9"	28' 8"	24' 2"
800S350-118	24	50	39' 8"	34' 8"	29' 3"	36' 1"	31' 6"	26' 7"	33' 6"	29' 3"	24' 8"	31' 6"	27' 6"	23' 3"	29' 11"	26' 2"	22' 1"	28' 8"	25' 0"	21' 1"

See Curtain Wall Limiting Heights Table Notes on page 25.

Combined Axial and Lateral Load Table Notes

1. Allowable axial loads listed in kips (1 kip = 1000 pounds).
2. Allowable axial loads determined in accordance with section C5 AISI S100-12, with section D4 used for treatment of punchouts, and assuming that all axial loads pass through the geometric center of the section
3. Listed lateral pressures and axial loads have not been modified for 1/3 stress increase based on wind/earthquake or multiple transient loads.
4. Allowable axial loads based on lateral and torsional bracing at a maximum spacing of 4 feet on center.
5. The 5 psf live load has not been reduced for deflection checks. For 15 psf or higher wind pressure, read the note below.

   IBC 2015/ASCE 7-10: Due to the change in the model building codes, design wind pressures determined using IBC 2012/ASCE 7-10 are strength level loads (LRFD) in comparison to those determined in earlier IBC codes which were service level loads (ASD). The load/span tables that follow are based on service level (ASD) wind loads. Therefore, to properly use the load/span tables in this catalog, multiply the IBC 2012/ASCE 7-10 design wind pressures by 0.6 (Reference section 2.4 ASCE 7-10) prior to entering the load/span tables.

   - Example:

     * ASCE 7-10 Calculated Design Wind Pressure = 25 psf (Strength level loads, LRFD)

     * Convert to service level loads (ASD) = 25 psf x 0.6 = 15 psf

     * Use 15 psf as the Pressure Value used in this Table to determine the member span

   Any Other Building Code: The load/span tables that follow are based on service level (ASD) wind loads. If the wind load being used meets this criterion, it does not need to be modified prior to using the tables.
6. Studs are assumed to be adequately braced at a maximum spacing of Lu to develop full allowable moment, Ma.
7. End supports have not been checked for web crippling. Refer to web crippling capacity tables.
8. All tables are based on simple (single) span.
9. Cells marked with an " * " have h/t>200, thus require bearing stiffeners. Cells are left blank when h/t>260.
10. Cells marked with an a, b, c, d, e or f meets L/720, L/600, L/480, L/360, L/240, or L/120 respectively. Blank cells do not meet L/120.
11. Stud distortional buckling moment based on assumed $K\varphi = 0$
12. Moment of inertia for deflection is optimized based on the maximum moment at service loads for the listed spans; therefore span values may be greater than spans based on effective moment of inertia listed in section property tables

Combined Axial and Lateral Load Tables

SFIA
STEEL FRAMING INDUSTRY ASSOCIATION

5 psf Lateral Load (Interior Walls Only)

Wall Height (ft)	Spacing (in.) o.c.	350S162-(mils)					362S137-(mils)				362S162-(mils)				
		33 ksi		50 ksi			33 ksi		50 ksi		33 ksi		50 ksi		
		33	43	54	68	97	33	43	54	68	33	43	54	68	97
8	12	1.81 a	2.56 a	3.97 a	5.08 a	7.44 a	1.49 a	2.14 a	3.32 a	4.37 a	1.87 a	2.65 a	4.15 a	5.38 a	7.87 a
	16	1.74 a	2.48 a	3.9 a	5.01 a	7.36 a	1.42 a	2.07 a	3.26 a	4.3 a	1.8 a	2.57 a	4.08 a	5.31 a	7.79 a
	24	1.58 a	2.32 a	3.76 a	4.87 a	7.21 a	1.29 a	1.93 a	3.13 a	4.17 a	1.65 a	2.42 a	3.94 a	5.17 a	7.63 a
9	12	1.67 a	2.38 a	3.65 a	4.67 a	6.83 a	1.38 a	2.01 a	3.11 a	4.07 a	1.74 a	2.48 a	3.86 a	4.99 a	7.28 a
	16	1.57 a	2.28 a	3.56 a	4.58 a	6.74 a	1.3 a	1.92 a	3.02 a	3.99 a	1.64 a	2.38 a	3.77 a	4.9 a	7.18 a
	24	1.39 a	2.09 a	3.39 a	4.41 a	6.54 a	1.13 a	1.74 a	2.87 a	3.82 a	1.46 a	2.19 a	3.6 a	4.72 a	6.98 a
10	12	1.51 a	2.18 a	3.29 a	4.23 a	6.17 a	1.26 a	1.85 a	2.85 a	3.73 a	1.58 a	2.29 a	3.53 a	4.55 a	6.62 a
	16	1.4 a	2.07 a	3.19 a	4.12 a	6.05 a	1.16 a	1.74 a	2.75 a	3.63 a	1.47 a	2.17 a	3.42 a	4.44 a	6.5 a
	24	1.19 a	1.84 a	2.99 a	3.92 a	5.83 a	0.96 a	1.54 a	2.57 a	3.44 a	1.26 a	1.95 a	3.22 a	4.23 a	6.27 a
12	12	1.18 a	1.75 a	2.56 a	3.31 a	4.8 a	0.99 a	1.51 a	2.27 a	2.97 a	1.25 a	1.87 a	2.79 a	3.6 a	5.23 a
	16	1.04 b	1.61 a	2.44 a	3.18 a	4.66 a	0.86 b	1.37 a	2.15 a	2.85 a	1.11 a	1.72 a	2.66 a	3.47 a	5.08 a
	24	0.79 d	1.34 c	2.21 a	2.94 a	4.39 a	0.63 d	1.12 c	1.93 b	2.62 a	0.86 c	1.44 b	2.42 a	3.22 a	4.8 a
14	12	0.86 c	1.33 a	1.95 a	2.54 a	3.68 a	0.72 c	1.15 b	1.75 a	2.3 a	0.93 b	1.44 a	2.14 a	2.78 a	4.03 a
	16	0.71 d	1.17 c	1.82 b	2.4 a	3.53 a	0.59 d	1 c	1.62 b	2.16 a	0.78 d	1.28 b	2 a	2.64 a	3.87 a
	24	0.46 e	0.89 d	1.58 d	2.16 c	3.25 a	0.34 e	0.73 e	1.39 d	1.92 c	0.52 e	0.99 d	1.75 c	2.38 b	3.58 a
16	12	0.59 d	0.96 c	1.48 b	1.95 a	2.84 a	0.49 d	0.83 d	1.33 c	1.76 b	0.65 d	1.06 c	1.63 b	2.14 a	3.12 a
	16	0.45 e	0.8 d	1.35 d	1.81 c	2.69 a	0.36 e	0.68 e	1.2 d	1.63 c	0.51 e	0.9 d	1.49 c	2 b	2.96 a
	24	0.21 f	0.54 e	1.12 e	1.57 d	2.41 c	0.12 f	0.42 f	0.97 e	1.38 e	0.25 f	0.61 e	1.25 e	1.74 d	2.67 c

5 psf Lateral Load (Interior Walls Only)

Wall Height (ft)	Spacing (in.) o.c.	362S200-(mils)					400S137-(mils)				400S162-(mils)				
		33 ksi		50 ksi			33 ksi		50 ksi		33 ksi		50 ksi		
		33	43	54	68	97	33	43	54	68	33	43	54	68	97
8	12	2.25 a	3.28 a	5.18 a	6.68 a	9.54 a	1.61 a	2.31 a	3.67 a	4.98 a	2.03 a	2.87 a	4.62 a	6.18 a	9.08 a
	16	2.17 a	3.2 a	5.1 a	6.6 a	9.46 a	1.55 a	2.25 a	3.61 a	4.91 a	1.96 a	2.8 a	4.55 a	6.11 a	9.01 a
	24	2.01 a	3.03 a	4.94 a	6.45 a	9.3 a	1.42 a	2.12 a	3.49 a	4.79 a	1.82 a	2.65 a	4.42 a	5.97 a	8.86 a
9	12	2.1 a	3.07 a	4.79 a	6.17 a	8.81 a	1.52 a	2.2 a	3.49 a	4.79 a	1.91 a	2.72 a	4.37 a	5.85 a	8.56 a
	16	2 a	2.96 a	4.69 a	6.07 a	8.71 a	1.44 a	2.12 a	3.42 a	4.7 a	1.82 a	2.63 a	4.28 a	5.76 a	8.46 a
	24	1.8 a	2.76 a	4.49 a	5.88 a	8.51 a	1.28 a	1.95 a	3.26 a	4.54 a	1.65 a	2.45 a	4.11 a	5.59 a	8.27 a
10	12	1.93 a	2.84 a	4.37 a	5.61 a	8.02 a	1.41 a	2.07 a	3.28 a	4.49 a	1.77 a	2.56 a	4.07 a	5.47 a	7.95 a
	16	1.81 a	2.71 a	4.25 a	5.49 a	7.9 a	1.31 a	1.97 a	3.19 a	4.38 a	1.67 a	2.45 a	3.97 a	5.36 a	7.83 a
	24	1.57 a	2.47 a	4.01 a	5.27 a	7.66 a	1.12 a	1.77 a	3 a	4.18 a	1.46 a	2.23 a	3.77 a	5.14 a	7.6 a
12	12	1.56 a	2.32 a	3.45 a	4.44 a	6.36 a	1.16 a	1.76 a	2.77 a	3.75 a	1.46 a	2.17 a	3.41 a	4.54 a	6.58 a
	16	1.4 a	2.16 a	3.3 a	4.3 a	6.21 a	1.03 a	1.62 a	2.64 a	3.61 a	1.32 a	2.02 a	3.27 a	4.39 a	6.42 a
	24	1.11 c	1.86 a	3.03 a	4.03 a	5.92 a	0.79 c	1.36 b	2.4 a	3.35 a	1.06 b	1.74 a	3.01 a	4.12 a	6.11 a
14	12	1.18 a	1.81 a	2.64 a	3.43 a	4.94 a	0.9 b	1.41 a	2.22 a	2.96 a	1.14 a	1.75 a	2.71 a	3.57 a	5.17 a
	16	1.01 c	1.63 b	2.48 a	3.28 a	4.77 a	0.75 c	1.25 b	2.08 a	2.8 a	0.98 c	1.58 a	2.55 a	3.41 a	4.99 a
	24	0.7 d	1.31 d	2.19 c	2.99 a	4.46 a	0.49 e	0.96 d	1.81 c	2.52 b	0.7 d	1.26 c	2.27 b	3.11 a	4.66 a
16	12	0.84 c	1.36 b	2.01 a	2.66 a	3.85 a	0.65 d	1.08 c	1.74 a	2.3 a	0.84 c	1.35 b	2.12 a	2.78 a	4.04 a
	16	0.67 d	1.18 c	1.86 c	2.5 a	3.68 a	0.5 e	0.91 d	1.59 c	2.14 b	0.68 d	1.17 c	1.96 b	2.61 a	3.85 a
	24	0.38 e	0.86 e	1.58 d	2.21 c	3.37 b	0.23 f	0.61 e	1.32 d	1.86 d	0.39 e	0.85 e	1.67 d	2.31 c	3.52 b

See Combined Axial and Lateral Load Table Notes on page 37.

Combined Axial and Lateral Load Tables

SFIA
STEEL FRAMING INDUSTRY ASSOCIATION

5 psf Lateral Load (Interior Walls Only)

Wall Height (ft)	Spacing (in.) o.c.	400S200-(mils)					550S162-(mils)					600S137-(mils)				
		33 ksi		50 ksi			33 ksi		50 ksi			33 ksi		50 ksi		
		33	43	54	68	97	33	43	54	68	97	33	43	54	68	97
8	12	2.42 a	3.55 a	5.77 a	7.63 a	11.03 a	2.39 a	3.38 a	5.63 a	7.46 a	11.33 a	1.77 a	2.51 a	3.81 a	5.05 a	7.56 a
	16	2.34 a	3.48 a	5.7 a	7.56 a	10.95 a	2.34 a	3.33 a	5.58 a	7.41 a	11.28 a	1.73 a	2.47 a	3.78 a	5.02 a	7.53 a
	24	2.19 a	3.32 a	5.54 a	7.41 a	10.8 a	2.24 a	3.23 a	5.49 a	7.32 a	11.2 a	1.65 a	2.39 a	3.72 a	4.96 a	7.48 a
9	12	2.28 a	3.37 a	5.43 a	7.19 a	10.36 a	2.32 a	3.31 a	5.55 a	7.41 a	11.28 a	1.74 a	2.47 a	3.78 a	5.02 a	7.54 a
	16	2.19 a	3.27 a	5.33 a	7.1 a	10.26 a	2.26 a	3.24 a	5.49 a	7.36 a	11.23 a	1.69 a	2.43 a	3.74 a	4.98 a	7.5 a
	24	2 a	3.08 a	5.14 a	6.91 a	10.06 a	2.13 a	3.12 a	5.38 a	7.24 a	11.11 a	1.59 a	2.33 a	3.66 a	4.9 a	7.43 a
10	12	2.13 a	3.16 a	5.04 a	6.7 a	9.61 a	2.25 a	3.22 a	5.41 a	7.35 a	11.23 a	1.7 a	2.44 a	3.75 a	4.99 a	7.51 a
	16	2.01 a	3.04 a	4.92 a	6.58 a	9.48 a	2.16 a	3.14 a	5.34 a	7.27 a	11.15 a	1.63 a	2.37 a	3.7 a	4.94 a	7.46 a
	24	1.79 a	2.81 a	4.69 a	6.35 a	9.24 a	2 a	2.99 a	5.19 a	7.12 a	11 a	1.51 a	2.25 a	3.59 a	4.84 a	7.37 a
12	12	1.79 a	2.69 a	4.19 a	5.57 a	7.97 a	2.05 a	3 a	5.04 a	6.87 a	11.04 a	1.6 a	2.34 a	3.67 a	4.91 a	7.43 a
	16	1.63 a	2.53 a	4.03 a	5.41 a	7.8 a	1.93 a	2.89 a	4.93 a	6.76 a	10.91 a	1.51 a	2.25 a	3.59 a	4.83 a	7.36 a
	24	1.35 a	2.22 a	3.74 a	5.11 a	7.48 a	1.71 a	2.68 a	4.71 a	6.54 a	10.66 a	1.33 a	2.07 a	3.43 a	4.67 a	7.22 a
14	12	1.43 a	2.19 a	3.32 a	4.39 a	6.3 a	1.81 a	2.72 a	4.54 a	6.23 a	10 a	1.48 a	2.22 a	3.55 a	4.79 a	7.32 a
	16	1.25 b	2 a	3.14 a	4.21 a	6.12 a	1.66 a	2.57 a	4.39 a	6.07 a	9.83 a	1.36 a	2.09 a	3.44 a	4.67 a	7.22 a
	24	0.92 d	1.65 b	2.82 a	3.88 a	5.76 a	1.37 a	2.29 a	4.11 a	5.78 a	9.49 a	1.11 a	1.85 a	3.21 a	4.45 a	7.02 a
16	12	1.07 b	1.71 a	2.6 a	3.42 a	4.95 a	1.53 a	2.39 a	3.95 a	5.45 a	8.76 a	1.34 a	2.07 a	3.4 a	4.63 a	7.17 a
	16	0.89 d	1.51 b	2.41 a	3.24 a	4.76 a	1.35 a	2.2 a	3.77 a	5.26 a	8.54 a	1.18 a	1.9 a	3.24 a	4.47 a	7.02 a
	24	0.56 e	1.16 d	2.09 c	2.91 b	4.4 a	1.02 c	1.87 a	3.43 a	4.91 a	8.12 a	0.87 c	1.59 a	2.95 a	4.16 a	6.73 a

5 psf Lateral Load (Interior Walls Only)

Wall Height (ft)	Spacing (in.) o.c.	600S162-(mils)					600S200-(mils)					800S137-(mils)				
		33 ksi		50 ksi			33 ksi		50 ksi			33 ksi		50 ksi		
		33	43	54	68	97	33	43	54	68	97	33	43	54	68	97
8	12	2.42 a	3.39 a	5.61 a	7.45 a	11.4 a	2.86 a	4.31 a	7.46 a	9.97 a	15.65 a	1.71 a*	2.43 a	3.57 a	4.75 a	7.23 a
	16	2.37 a	3.35 a	5.57 a	7.41 a	11.36 a	2.81 a	4.26 a	7.41 a	9.92 a	15.6 a	1.68 a*	2.4 a	3.55 a	4.73 a	7.21 a
	24	2.28 a	3.27 a	5.49 a	7.33 a	11.29 a	2.72 a	4.16 a	7.31 a	9.83 a	15.51 a	1.63 a*	2.35 a	3.5 a	4.68 a	7.17 a
9	12	2.38 a	3.36 a	5.57 a	7.41 a	11.36 a	2.8 a	4.23 a	7.31 a	9.79 a	15.39 a	1.69 a*	2.4 a	3.55 a	4.73 a	7.21 a
	16	2.32 a	3.3 a	5.52 a	7.36 a	11.31 a	2.74 a	4.16 a	7.25 a	9.73 a	15.33 a	1.65 a*	2.37 a	3.52 a	4.7 a	7.19 a
	24	2.2 a	3.19 a	5.42 a	7.26 a	11.22 a	2.62 a	4.03 a	7.12 a	9.61 a	15.2 a	1.58 a*	2.3 a	3.47 a	4.65 a	7.14 a
10	12	2.33 a	3.31 a	5.53 a	7.37 a	11.32 a	2.73 a	4.13 a	7.14 a	9.58 a	15.07 a	1.66 a*	2.38 a	3.53 a	4.71 a	7.2 a
	16	2.25 a	3.24 a	5.46 a	7.3 a	11.26 a	2.65 a	4.05 a	7.05 a	9.5 a	14.99 a	1.62 a*	2.34 a	3.49 a	4.68 a	7.16 a
	24	2.1 a	3.11 a	5.33 a	7.17 a	11.13 a	2.5 a	3.88 a	6.89 a	9.34 a	14.83 a	1.53 a*	2.26 a	3.43 a	4.61 a	7.1 a
12	12	2.17 a	3.15 a	5.35 a	7.25 a	11.2 a	2.55 a	3.88 a	6.67 a	9 a	14.21 a	1.6 a*	2.32 a	3.48 a	4.66 a	7.15 a
	16	2.06 a	3.05 a	5.25 a	7.15 a	11.1 a	2.44 a	3.76 a	6.55 a	8.89 a	14.09 a	1.54 a*	2.26 a	3.43 a	4.61 a	7.1 a
	24	1.85 a	2.85 a	5.05 a	6.95 a	10.89 a	2.22 a	3.52 a	6.31 a	8.66 a	13.85 a	1.41 a*	2.14 a	3.33 a	4.52 a	7.01 a
14	12	1.95 a	2.91 a	4.93 a	6.77 a	10.96 a	2.32 a	3.56 a	6.07 a	8.26 a	13.08 a	1.53 a*	2.25 a	3.42 a	4.6 a	7.09 a
	16	1.81 a	2.78 a	4.8 a	6.63 a	10.8 a	2.17 a	3.4 a	5.91 a	8.1 a	12.91 a	1.44 a*	2.16 a	3.35 a	4.53 a	7.03 a
	24	1.54 a	2.51 a	4.53 a	6.35 a	10.49 a	1.89 a	3.09 a	5.59 a	7.79 a	12.58 a	1.27 a*	2 a	3.21 a	4.4 a	6.9 a
16	12	1.71 a	2.62 a	4.41 a	6.1 a	9.89 a	2.05 a	3.18 a	5.38 a	7.38 a	11.74 a	1.44 a*	2.16 a	3.34 a	4.53 a	7.02 a
	16	1.53 a	2.45 a	4.24 a	5.91 a	9.68 a	1.87 a	2.98 a	5.18 a	7.17 a	11.52 a	1.32 a*	2.05 a	3.25 a	4.44 a	6.93 a
	24	1.2 b	2.12 a	3.91 a	5.57 a	9.28 a	1.52 a	2.61 a	4.79 a	6.79 a	11.09 a	1.1 a*	1.83 a	3.06 a	4.26 a	6.75 a

See Combined Axial and Lateral Load Table Notes on page 37.

5 psf Lateral Load (Interior Walls Only)

Wall Height (ft)	Spacing (in.) o.c.	800S162-(mils)					800S200-(mils)				
		33 ksi		50 ksi			33 ksi		50 ksi		
		33	43	54	68	97	33	43	54	68	97
8	12	2.39 a*	3.35 a	5.43 a	7.25 a	11.26 a	2.97 a*	4.47 a	7.74 a	10.29 a	15.98 a
	16	2.36 a*	3.32 a	5.4 a	7.22 a	11.24 a	2.93 a*	4.44 a	7.71 a	10.25 a	15.95 a
	24	2.29 a*	3.26 a	5.35 a	7.16 a	11.18 a	2.86 a*	4.36 a	7.64 a	10.19 a	15.89 a
9	12	2.37 a*	3.33 a	5.41 a	7.22 a	11.24 a	2.94 a*	4.44 a	7.71 a	10.26 a	15.95 a
	16	2.32 a*	3.29 a	5.37 a	7.19 a	11.21 a	2.89 a*	4.39 a	7.67 a	10.21 a	15.91 a
	24	2.24 a*	3.21 a	5.3 a	7.12 a	11.14 a	2.8 a*	4.3 a	7.57 a	10.13 a	15.83 a
10	12	2.33 a*	3.3 a	5.38 a	7.2 a	11.21 a	2.9 a*	4.41 a	7.68 a	10.22 a	15.92 a
	16	2.28 a*	3.25 a	5.34 a	7.15 a	11.17 a	2.85 a*	4.35 a	7.62 a	10.17 a	15.87 a
	24	2.18 a*	3.15 a	5.24 a	7.06 a	11.08 a	2.73 a*	4.23 a	7.5 a	10.06 a	15.77 a
12	12	2.26 a*	3.22 a	5.31 a	7.13 a	11.15 a	2.82 a*	4.32 a	7.59 a	10.14 a	15.84 a
	16	2.18 a*	3.15 a	5.24 a	7.06 a	11.08 a	2.74 a*	4.23 a	7.5 a	10.06 a	15.76 a
	24	2.03 a*	3 a	5.11 a	6.93 a	10.95 a	2.57 a*	4.06 a	7.32 a	9.9 a	15.61 a
14	12	2.17 a*	3.13 a	5.22 a	7.04 a	11.06 a	2.69 a*	4.16 a	7.36 a	9.96 a	15.73 a
	16	2.06 a*	3.03 a	5.13 a	6.95 a	10.96 a	2.58 a*	4.04 a	7.24 a	9.84 a	15.61 a
	24	1.85 a*	2.83 a	4.94 a	6.76 a	10.77 a	2.35 a*	3.8 a	6.99 a	9.61 a	15.38 a
16	12	2.05 a*	3.02 a	5.11 a	6.93 a	10.94 a	2.52 a*	3.93 a	6.95 a	9.46 a	15.15 a
	16	1.92 a*	2.89 a	4.98 a	6.8 a	10.81 a	2.37 a*	3.77 a	6.78 a	9.3 a	15 a
	24	1.64 a*	2.62 a	4.72 a	6.54 a	10.54 a	2.09 a*	3.46 a	6.46 a	9 a	14.68 a

See Combined Axial and Lateral Load Table Notes on page 37.

Combined Axial and Lateral Load Tables

SFIA
STEEL FRAMING INDUSTRY ASSOCIATION

15 psf Lateral Load

Wall Height (ft)	Spacing (in.) o.c.	350S162-(mils)					362S137-(mils)				362S162-(mils)				
		33 ksi		50 ksi			33 ksi		50 ksi		33 ksi		50 ksi		
		33	43	54	68	97	33	43	54	68	33	43	54	68	97
8	12	1.37 a	2.1 a	3.55 a	4.66 a	6.98 a	1.09 a	1.72 a	2.95 a	3.98 a	1.44 a	2.2 a	3.74 a	4.96 a	7.41 a
	16	1.16 a	1.89 a	3.36 a	4.46 a	6.76 a	0.91 a	1.53 a	2.77 a	3.79 a	1.23 a	1.99 a	3.55 a	4.76 a	7.19 a
	24	0.78 a	1.49 a	2.99 a	4.08 a	6.34 a	0.56 b	1.16 a	2.43 a	3.44 a	0.85 a	1.59 a	3.17 a	4.38 a	6.76 a
9	12	1.13 a	1.82 a	3.14 a	4.16 a	6.27 a	0.9 a	1.49 a	2.64 a	3.59 a	1.21 a	1.93 a	3.35 a	4.47 a	6.7 a
	16	0.9 a	1.57 a	2.91 a	3.92 a	6 a	0.68 a	1.26 a	2.43 a	3.37 a	0.97 a	1.67 a	3.12 a	4.23 a	6.43 a
	24	0.46 c	1.11 b	2.48 a	3.48 a	5.5 a	0.28 c	0.83 b	2.03 a	2.94 a	0.53 c	1.21 a	2.68 a	3.77 a	5.92 a
10	12	0.9 a	1.53 a	2.71 a	3.63 a	5.51 a	0.7 b	1.25 a	2.31 a	3.16 a	0.97 a	1.64 a	2.93 a	3.94 a	5.95 a
	16	0.64 c	1.25 a	2.45 a	3.37 a	5.21 a	0.46 c	0.99 b	2.07 a	2.91 a	0.7 b	1.36 a	2.67 a	3.66 a	5.64 a
	24	0.17 d	0.74 c	1.99 b	2.88 a	4.65 a	0.02 e	0.51 d	1.62 c	2.44 b	0.23 d	0.84 c	2.18 b	3.15 a	5.06 a
12	12	0.47 d	0.98 c	1.9 b	2.62 a	4.03 a	0.33 d	0.78 c	1.63 b	2.3 a	0.53 d	1.08 b	2.1 a	2.88 a	4.43 a
	16	0.18 e	0.67 d	1.62 c	2.33 b	3.7 a	0.06 e	0.48 d	1.36 c	2.02 b	0.24 e	0.76 d	1.8 c	2.58 b	4.08 a
	24		0.13 e	1.13 e	1.81 d	3.11 c			0.89 e	1.51 d		0.2 e	1.29 d	2.03 d	3.46 b
14	12	0.13 e	0.53 e	1.27 d	1.83 c	2.89 a	0.03 e	0.38 e	1.08 d	1.6 c	0.18 e	0.61 d	1.42 d	2.03 c	3.19 a
	16		0.22 e	1 e	1.54 d	2.56 c		0.08 e	0.82 e	1.31 d		0.29 e	1.13 e	1.73 d	2.85 c
	24			0.53 f	1.04 e	1.99 d			0.35 f	0.82 e			0.64 f	1.2 e	2.24 d
16	12		0.2 f	0.82 e	1.25 d	2.06 c		0.09 f	0.68 e	1.07 e		0.26 e	0.93 e	1.41 d	2.29 c
	16			0.57 f	0.98 e	1.75 d			0.42 f	0.8 e			0.66 f	1.12 e	1.96 d
	24			0.13 f	0.51 f	1.21 e				0.34 f			0.19 f	0.62 f	1.39 e

15 psf Lateral Load

Wall Height (ft)	Spacing (in.) o.c.	362S200-(mils)					400S137-(mils)				400S162-(mils)				
		33 ksi		50 ksi			33 ksi		50 ksi		33 ksi		50 ksi		
		33	43	54	68	97	33	43	54	68	33	43	54	68	97
8	12	1.77 a	2.79 a	4.71 a	6.22 a	9.07 a	1.24 a	1.92 a	3.32 a	4.6 a	1.62 a	2.45 a	4.22 a	5.77 a	8.64 a
	16	1.55 a	2.56 a	4.49 a	6 a	8.84 a	1.06 a	1.74 a	3.14 a	4.42 a	1.42 a	2.25 a	4.03 a	5.57 a	8.42 a
	24	1.13 a	2.13 a	4.06 a	5.58 a	8.4 a	0.72 a	1.38 a	2.81 a	4.06 a	1.05 a	1.86 a	3.67 a	5.18 a	7.99 a
9	12	1.51 a	2.47 a	4.21 a	5.6 a	8.22 a	1.05 a	1.71 a	3.04 a	4.3 a	1.4 a	2.2 a	3.87 a	5.33 a	7.99 a
	16	1.25 a	2.19 a	3.94 a	5.34 a	7.94 a	0.84 a	1.49 a	2.83 a	4.07 a	1.17 a	1.95 a	3.64 a	5.08 a	7.71 a
	24	0.76 b	1.68 a	3.44 a	4.84 a	7.41 a	0.44 b	1.06 a	2.43 a	3.63 a	0.73 b	1.49 a	3.2 a	4.6 a	7.19 a
10	12	1.25 a	2.13 a	3.69 a	4.95 a	7.32 a	0.86 a	1.49 a	2.74 a	3.89 a	1.17 a	1.93 a	3.48 a	4.83 a	7.26 a
	16	0.95 a	1.82 a	3.38 a	4.64 a	7 a	0.62 b	1.22 a	2.49 a	3.62 a	0.9 a	1.64 a	3.21 a	4.54 a	6.93 a
	24	0.42 c	1.25 b	2.83 a	4.09 a	6.4 a	0.17 d	0.74 c	2.03 b	3.11 a	0.41 c	1.12 b	2.7 a	3.99 a	6.33 a
12	12	0.74 c	1.46 a	2.66 a	3.66 a	5.52 a	0.48 c	1.01 b	2.08 a	2.99 a	0.72 b	1.37 a	2.65 a	3.73 a	5.69 a
	16	0.41 d	1.11 c	2.32 b	3.32 a	5.16 a	0.19 d	0.7 c	1.78 b	2.67 a	0.41 d	1.03 c	2.33 b	3.38 a	5.3 a
	24		0.49 d	1.73 d	2.72 c	4.49 a		0.14 e	1.26 d	2.09 c		0.43 d	1.75 d	2.76 c	4.6 a
14	12	0.32 e	0.9 d	1.82 c	2.61 b	4.05 a	0.15 e	0.58 d	1.46 c	2.15 b	0.33 d	0.86 c	1.89 c	2.7 a	4.21 a
	16		0.54 e	1.49 d	2.28 c	3.68 b		0.25 e	1.15 d	1.82 d	0.01 e	0.5 d	1.56 d	2.35 c	3.81 a
	24			0.92 e	1.69 e	3.03 d			0.62 e	1.24 e			0.98 e	1.73 d	3.11 c
16	12	0.01 f	0.46 e	1.22 d	1.85 d	2.97 b		0.23 e	0.97 e	1.49 d	0.03 e	0.44 e	1.3 d	1.92 c	3.08 b
	16		0.12 f	0.91 e	1.53 e	2.61 d			0.67 e	1.17 e		0.09 e	0.97 e	1.58 d	2.7 c
	24			0.38 f	0.98 f	1.99 e			0.16 f	0.62 f			0.42 f	0.98 e	2.03 e

See Combined Axial and Lateral Load Table Notes on page 37.

Combined Axial and Lateral Load Tables

SFIA
STEEL FRAMING INDUSTRY ASSOCIATION

15 psf Lateral Load

Wall Height (ft)	Spacing (in.) o.c.	400S200-(mils)					550S162-(mils)					600S137-(mils)				
		33 ksi		50 ksi			33 ksi		50 ksi			33 ksi		50 ksi		
		33	43	54	68	97	33	43	54	68	97	33	43	54	68	97
8	12	1.97 a	3.1 a	5.32 a	7.19 a	10.57 a	2.08 a	3.09 a	5.36 a	7.19 a	11.07 a	1.54 a	2.28 a	3.62 a	4.87 a	7.4 a
	16	1.76 a	2.88 a	5.1 a	6.97 a	10.34 a	1.93 a	2.95 a	5.22 a	7.06 a	10.94 a	1.42 a	2.17 a	3.53 a	4.77 a	7.32 a
	24	1.35 a	2.46 a	4.68 a	6.55 a	9.9 a	1.64 a	2.68 a	4.96 a	6.81 a	10.68 a	1.19 a	1.95 a	3.34 a	4.59 a	7.16 a
9	12	1.73 a	2.8 a	4.86 a	6.63 a	9.77 a	1.94 a	2.94 a	5.2 a	7.07 a	10.94 a	1.44 a	2.18 a	3.54 a	4.78 a	7.33 a
	16	1.47 a	2.53 a	4.59 a	6.36 a	9.49 a	1.75 a	2.77 a	5.03 a	6.9 a	10.77 a	1.29 a	2.04 a	3.41 a	4.66 a	7.22 a
	24	0.99 a	2.03 a	4.09 a	5.84 a	8.94 a	1.38 a	2.42 a	4.69 a	6.56 a	10.43 a	1.01 a	1.76 a	3.17 a	4.42 a	7.02 a
10	12	1.47 a	2.48 a	4.36 a	6.01 a	8.89 a	1.77 a	2.77 a	4.97 a	6.9 a	10.78 a	1.33 a	2.07 a	3.44 a	4.68 a	7.24 a
	16	1.18 a	2.17 a	4.05 a	5.69 a	8.55 a	1.54 a	2.56 a	4.76 a	6.69 a	10.56 a	1.15 a	1.9 a	3.29 a	4.53 a	7.11 a
	24	0.64 b	1.59 a	3.47 a	5.1 a	7.92 a	1.1 a	2.14 a	4.34 a	6.26 a	10.12 a	0.8 a	1.55 a	2.98 a	4.23 a	6.85 a
12	12	0.96 b	1.81 a	3.33 a	4.69 a	7.04 a	1.39 a	2.36 a	4.4 a	6.22 a	10.3 a	1.07 a	1.81 a	3.2 a	4.44 a	7.02 a
	16	0.61 c	1.44 b	2.96 a	4.31 a	6.63 a	1.08 a	2.07 a	4.1 a	5.91 a	9.96 a	0.82 a	1.56 a	2.97 a	4.21 a	6.82 a
	24		0.78 d	2.31 c	3.62 b	5.88 a	0.52 b	1.51 a	3.54 a	5.32 a	9.29 a	0.35 b	1.08 a	2.54 a	3.78 a	6.43 a
14	12	0.5 d	1.21 c	2.39 b	3.44 a	5.29 a	0.97 a	1.9 a	3.71 a	5.36 a	9.01 a	0.78 a	1.5 a	2.9 a	4.12 a	6.72 a
	16	0.14 e	0.81 d	2.02 c	3.05 b	4.86 a	0.61 c	1.53 a	3.34 a	4.97 a	8.55 a	0.46 b	1.17 a	2.59 a	3.81 a	6.43 a
	24		0.13 e	1.36 e	2.36 d	4.11 c		0.86 c	2.66 b	4.24 a	7.72 a		0.57 c	2.02 b	3.23 a	5.88 a
16	12	0.14 e	0.71 d	1.67 d	2.48 c	3.93 a	0.58 c	1.41 b	2.98 a	4.42 a	7.55 a	0.46 c	1.16 a	2.53 a	3.73 a	6.32 a
	16		0.32 e	1.3 e	2.1 d	3.52 c	0.18 d	1.01 c	2.57 b	3.97 a	7.03 a	0.09 d	0.76 c	2.15 b	3.33 a	5.94 a
	24			0.68 f	1.45 e	2.79 d		0.28 e	1.84 d	3.18 c	6.11 b		0.05 d	1.47 d	2.61 c	5.22 a

15 psf Lateral Load

Wall Height (ft)	Spacing (in.) o.c.	600S162-(mils)					600S200-(mils)					800S137-(mils)				
		33 ksi		50 ksi			33 ksi		50 ksi			33 ksi		50 ksi		
		33	43	54	68	97	33	43	54	68	97	33	43	54	68	97
8	12	2.14 a	3.14 a	5.37 a	7.22 a	11.18 a	2.57 a	4.01 a	7.16 a	9.69 a	15.37 a	1.55 a*	2.27 a	3.44 a	4.62 a	7.12 a
	16	2 a	3.02 a	5.25 a	7.1 a	11.06 a	2.43 a	3.86 a	7.01 a	9.55 a	15.23 a	1.46 a*	2.19 a	3.38 a	4.56 a	7.06 a
	24	1.73 a	2.77 a	5.02 a	6.88 a	10.84 a	2.15 a	3.56 a	6.71 a	9.27 a	14.95 a	1.3 a*	2.03 a	3.25 a	4.44 a	6.94 a
9	12	2.02 a	3.03 a	5.26 a	7.11 a	11.07 a	2.43 a	3.84 a	6.92 a	9.43 a	15.02 a	1.48 a*	2.2 a	3.39 a	4.57 a	7.07 a
	16	1.85 a	2.87 a	5.11 a	6.96 a	10.92 a	2.26 a	3.65 a	6.73 a	9.25 a	14.84 a	1.37 a*	2.1 a	3.31 a	4.5 a	6.99 a
	24	1.51 a	2.56 a	4.81 a	6.67 a	10.63 a	1.9 a	3.27 a	6.35 a	8.89 a	14.48 a	1.17 a*	1.91 a	3.14 a	4.34 a	6.85 a
10	12	1.89 a	2.91 a	5.14 a	6.98 a	10.94 a	2.28 a	3.65 a	6.65 a	9.12 a	14.6 a	1.4 a*	2.13 a	3.33 a	4.51 a	7.01 a
	16	1.67 a	2.71 a	4.94 a	6.8 a	10.75 a	2.06 a	3.41 a	6.41 a	8.89 a	14.37 a	1.27 a*	2.01 a	3.23 a	4.42 a	6.92 a
	24	1.26 a	2.32 a	4.57 a	6.43 a	10.38 a	1.63 a	2.96 a	5.94 a	8.45 a	13.92 a	1.02 a*	1.76 a	3.03 a	4.23 a	6.74 a
12	12	1.54 a	2.56 a	4.76 a	6.66 a	10.6 a	1.91 a	3.19 a	5.96 a	8.33 a	13.5 a	1.22 a*	1.96 a	3.18 a	4.37 a	6.88 a
	16	1.25 a	2.28 a	4.48 a	6.37 a	10.3 a	1.6 a	2.86 a	5.63 a	8 a	13.16 a	1.04 a*	1.78 a	3.03 a	4.23 a	6.74 a
	24	0.7 a	1.75 a	3.94 a	5.82 a	9.74 a	1.03 a	2.24 a	4.98 a	7.37 a	12.5 a	0.68 a*	1.43 a	2.74 a	3.95 a	6.47 a
14	12	1.15 a	2.13 a	4.15 a	5.95 a	10.05 a	1.49 a	2.65 a	5.14 a	7.34 a	12.1 a	1.01 a*	1.75 a	3 a	4.2 a	6.71 a
	16	0.79 a	1.78 a	3.79 a	5.58 a	9.63 a	1.11 a	2.24 a	4.71 a	6.92 a	11.64 a	0.77 a*	1.51 a	2.8 a	4 a	6.52 a
	24	0.14 c	1.12 b	3.11 a	4.87 a	8.83 a	0.42 c	1.48 a	3.92 a	6.13 a	10.78 a	0.29 a*	1.04 a	2.41 a	3.62 a	6.14 a
16	12	0.75 b	1.67 a	3.45 a	5.08 a	8.73 a	1.05 a	2.09 a	4.26 a	6.25 a	10.5 a	0.77 a*	1.51 a	2.79 a	3.99 a	6.49 a
	16	0.35 c	1.26 b	3.03 a	4.64 a	8.22 a	0.62 c	1.62 a	3.76 a	5.75 a	9.94 a	0.46 a*	1.2 a	2.53 a	3.73 a	6.24 a
	24		0.51 d	2.28 c	3.82 b	7.28 a		0.77 c	2.88 b	4.85 a	8.92 a		0.61 a	2.02 a	3.22 a	5.74 a

See Combined Axial and Lateral Load Table Notes on page 37.

15 psf Lateral Load

Wall Height (ft)	Spacing (in.) o.c.	800S162-(mils)					800S200-(mils)				
		33 ksi		50 ksi			33 ksi		50 ksi		
		33	43	54	68	97	33	43	54	68	97
8	12	2.2 a*	3.17 a	5.26 a	7.08 a	11.1 a	2.75 a*	4.25 a	7.53 a	10.09 a	15.8 a
	16	2.1 a*	3.07 a	5.18 a	7 a	11.02 a	2.65 a*	4.14 a	7.42 a	9.99 a	15.7 a
	24	1.9 a*	2.89 a	5.01 a	6.84 a	10.86 a	2.44 a*	3.93 a	7.21 a	9.8 a	15.52 a
9	12	2.12 a*	3.09 a	5.19 a	7.01 a	11.03 a	2.67 a*	4.16 a	7.44 a	10 a	15.71 a
	16	1.99 a*	2.97 a	5.08 a	6.91 a	10.93 a	2.53 a*	4.02 a	7.3 a	9.88 a	15.59 a
	24	1.75 a*	2.73 a	4.87 a	6.69 a	10.72 a	2.27 a*	3.74 a	7.02 a	9.63 a	15.35 a
10	12	2.02 a*	3 a	5.11 a	6.93 a	10.95 a	2.57 a*	4.05 a	7.33 a	9.91 a	15.62 a
	16	1.87 a*	2.85 a	4.97 a	6.8 a	10.82 a	2.4 a*	3.88 a	7.15 a	9.75 a	15.46 a
	24	1.57 a*	2.56 a	4.7 a	6.53 a	10.56 a	2.07 a*	3.54 a	6.81 a	9.43 a	15.16 a
12	12	1.81 a*	2.79 a	4.91 a	6.73 a	10.75 a	2.33 a*	3.8 a	7.06 a	9.66 a	15.37 a
	16	1.59 a*	2.57 a	4.71 a	6.53 a	10.55 a	2.09 a*	3.55 a	6.81 a	9.42 a	15.14 a
	24	1.16 a*	2.15 a	4.31 a	6.15 a	10.17 a	1.63 a*	3.05 a	6.3 a	8.95 a	14.68 a
14	12	1.55 a*	2.53 a	4.65 a	6.48 a	10.49 a	2.03 a*	3.45 a	6.63 a	9.28 a	15.04 a
	16	1.25 a*	2.24 a	4.38 a	6.2 a	10.21 a	1.71 a*	3.11 a	6.28 a	8.94 a	14.71 a
	24	0.69 a*	1.68 a	3.84 a	5.67 a	9.66 a	1.1 a*	2.46 a	5.59 a	8.29 a	14.05 a
16	12	1.25 a*	2.23 a	4.35 a	6.16 a	10.15 a	1.68 a*	3.02 a	6 a	8.55 a	14.23 a
	16	0.88 a*	1.86 a	3.98 a	5.8 a	9.77 a	1.28 a*	2.59 a	5.55 a	8.13 a	13.78 a
	24	0.19 b*	1.15 a	3.29 a	5.09 a	9.04 a	0.54 a*	1.79 a	4.71 a	7.3 a	12.92 a

See Combined Axial and Lateral Load Table Notes on page 37.

Combined Axial and Lateral Load Tables

SFIA
STEEL FRAMING INDUSTRY ASSOCIATION

20 psf Lateral Load

Wall Height (ft)	Spacing (in.) o.c.	350S162-(mils)					362S137-(mils)				362S162-(mils)				
		33 ksi		50 ksi			33 ksi		50 ksi		33 ksi		50 ksi		
		33	43	54	68	97	33	43	54	68	33	43	54	68	97
8	12	1.16 a	1.89 a	3.36 a	4.46 a	6.76 a	0.91 a	1.53 a	2.77 a	3.79 a	1.23 a	1.99 a	3.55 a	4.76 a	7.19 a
	16	0.9 a	1.62 a	3.11 a	4.21 a	6.48 a	0.67 a	1.28 a	2.54 a	3.56 a	0.98 a	1.72 a	3.3 a	4.5 a	6.9 a
	24	0.43 c	1.11 b	2.64 a	3.72 a	5.93 a	0.24 c	0.81 b	2.11 a	3.1 a	0.5 b	1.21 a	2.82 a	4.01 a	6.35 a
9	12	0.9 a	1.57 a	2.91 a	3.92 a	6 a	0.68 a	1.26 a	2.43 a	3.37 a	0.97 a	1.67 a	3.12 a	4.23 a	6.43 a
	16	0.6 c	1.26 a	2.62 a	3.62 a	5.66 a	0.41 c	0.97 b	2.16 a	3.08 a	0.67 b	1.36 a	2.82 a	3.92 a	6.09 a
	24	0.07 d	0.69 c	2.08 b	3.06 a	5.02 a		0.44 d	1.66 c	2.55 b	0.13 d	0.78 c	2.27 b	3.34 a	5.44 a
10	12	0.64 c	1.25 a	2.45 a	3.37 a	5.21 a	0.46 c	0.99 b	2.07 a	2.91 a	0.7 b	1.36 a	2.67 a	3.66 a	5.64 a
	16	0.32 d	0.91 c	2.14 b	3.03 a	4.83 a	0.16 d	0.66 c	1.77 b	2.59 a	0.38 d	1.01 c	2.34 a	3.32 a	5.25 a
	24		0.29 d	1.56 d	2.43 c	4.13 a		0.09 e	1.22 d	2.01 c		0.38 d	1.74 c	2.69 b	4.53 a
12	12	0.18 e	0.67 d	1.62 c	2.33 b	3.7 a	0.06 e	0.48 d	1.36 c	2.02 b	0.24 e	0.76 d	1.8 c	2.58 b	4.08 a
	16		0.3 e	1.29 d	1.97 c	3.3 b		0.13 e	1.04 d	1.67 d		0.38 e	1.45 d	2.2 c	3.66 b
	24			0.71 e	1.35 e	2.58 d			0.48 e	1.06 e			0.84 e	1.55 e	2.9 d
14	12		0.22 e	1 e	1.54 d	2.56 c		0.08 e	0.82 e	1.31 d		0.29 e	1.13 e	1.73 d	2.85 c
	16			0.68 e	1.2 e	2.17 d			0.5 f	0.97 e			0.79 e	1.36 e	2.43 d
	24			0.13 f	0.6 f	1.49 e				0.39 f			0.2 f	0.73 f	1.71 e
16	12			0.57 f	0.98 e	1.75 d			0.42 f	0.8 e			0.66 f	1.12 e	1.96 d
	16			0.26 f	0.66 f	1.38 e			0.13 f	0.49 f			0.34 f	0.77 f	1.57 e
	24				0.11 f	0.75 f								0.19 f	0.9 f

20 psf Lateral Load

Wall Height (ft)	Spacing (in.) o.c.	362S200-(mils)					400S137-(mils)				400S162-(mils)				
		33 ksi		50 ksi			33 ksi		50 ksi		33 ksi		50 ksi		
		33	43	54	68	97	33	43	54	68	33	43	54	68	97
8	12	1.55 a	2.56 a	4.49 a	6 a	8.84 a	1.06 a	1.74 a	3.14 a	4.42 a	1.42 a	2.25 a	4.03 a	5.57 a	8.42 a
	16	1.27 a	2.27 a	4.2 a	5.72 a	8.54 a	0.83 a	1.5 a	2.92 a	4.18 a	1.17 a	1.99 a	3.79 a	5.31 a	8.13 a
	24	0.74 b	1.71 a	3.65 a	5.18 a	7.97 a	0.4 b	1.04 a	2.5 a	3.72 a	0.7 a	1.5 a	3.32 a	4.81 a	7.58 a
9	12	1.25 a	2.19 a	3.94 a	5.34 a	7.94 a	0.84 a	1.49 a	2.83 a	4.07 a	1.17 a	1.95 a	3.64 a	5.08 a	7.71 a
	16	0.92 a	1.85 a	3.6 a	5 a	7.58 a	0.57 b	1.2 a	2.56 a	3.77 a	0.87 a	1.64 a	3.34 a	4.76 a	7.36 a
	24	0.32 c	1.21 b	2.97 a	4.37 a	6.91 a	0.07 d	0.67 c	2.06 a	3.21 a	0.33 c	1.07 b	2.78 a	4.16 a	6.7 a
10	12	0.95 a	1.82 a	3.38 a	4.64 a	7 a	0.62 b	1.22 a	2.49 a	3.62 a	0.9 a	1.64 a	3.21 a	4.54 a	6.93 a
	16	0.59 c	1.43 b	3 a	4.27 a	6.59 a	0.31 c	0.89 b	2.18 a	3.28 a	0.57 c	1.29 a	2.87 a	4.17 a	6.52 a
	24		0.74 d	2.32 c	3.58 b	5.84 a		0.3 d	1.61 c	2.65 b		0.64 c	2.24 b	3.48 a	5.76 a
12	12	0.41 d	1.11 c	2.32 b	3.32 a	5.16 a	0.19 d	0.7 c	1.78 b	2.67 a	0.41 d	1.03 c	2.33 b	3.38 a	5.3 a
	16	0.01 e	0.69 d	1.92 c	2.91 b	4.71 a		0.32 d	1.42 d	2.27 c	0.04 e	0.62 d	1.94 c	2.96 b	4.82 a
	24			1.21 e	2.19 d	3.9 c			0.79 e	1.58 d			1.25 e	2.2 d	3.96 c
14	12		0.54 e	1.49 d	2.28 c	3.68 b		0.25 e	1.15 d	1.82 d	0.01 e	0.5 d	1.56 d	2.35 c	3.81 a
	16		0.12 e	1.1 e	1.88 d	3.23 c			0.79 e	1.42 e		0.08 e	1.16 e	1.92 d	3.33 c
	24			0.43 f	1.18 e	2.45 e			0.15 f	0.73 f			0.48 f	1.18 e	2.49 d
16	12		0.12 f	0.91 e	1.53 e	2.61 d			0.67 e	1.17 e		0.09 e	0.97 e	1.58 d	2.7 c
	16			0.54 f	1.15 e	2.19 e			0.32 f	0.8 f			0.59 f	1.17 e	2.24 d
	24				0.5 f	1.46 f				0.15 f				0.48 f	1.45 e

See Combined Axial and Lateral Load Table Notes on page 37.

Combined Axial and Lateral Load Tables

SFIA
STEEL FRAMING INDUSTRY ASSOCIATION

20 psf Lateral Load

Wall Height (ft)	Spacing (in.) o.c.	400S200-(mils)					550S162-(mils)					600S137-(mils)				
		33 ksi		50 ksi			33 ksi		50 ksi			33 ksi		50 ksi		
		33	43	54	68	97	33	43	54	68	97	33	43	54	68	97
8	12	1.76 a	2.88 a	5.1 a	6.97 a	10.34 a	1.93 a	2.95 a	5.22 a	7.06 a	10.94 a	1.42 a	2.17 a	3.53 a	4.77 a	7.32 a
	16	1.48 a	2.6 a	4.82 a	6.69 a	10.05 a	1.74 a	2.77 a	5.05 a	6.89 a	10.77 a	1.27 a	2.02 a	3.4 a	4.65 a	7.21 a
	24	0.97 a	2.06 a	4.28 a	6.14 a	9.48 a	1.35 a	2.41 a	4.7 a	6.55 a	10.42 a	0.97 a	1.73 a	3.15 a	4.4 a	7 a
9	12	1.47 a	2.53 a	4.59 a	6.36 a	9.49 a	1.75 a	2.77 a	5.03 a	6.9 a	10.77 a	1.29 a	2.04 a	3.41 a	4.66 a	7.22 a
	16	1.15 a	2.19 a	4.25 a	6.01 a	9.12 a	1.5 a	2.54 a	4.8 a	6.67 a	10.54 a	1.1 a	1.85 a	3.25 a	4.5 a	7.09 a
	24	0.55 b	1.56 a	3.61 a	5.36 a	8.43 a	1.03 a	2.09 a	4.36 a	6.23 a	10.09 a	0.73 a	1.48 a	2.93 a	4.19 a	6.81 a
10	12	1.18 a	2.17 a	4.05 a	5.69 a	8.55 a	1.54 a	2.56 a	4.76 a	6.69 a	10.56 a	1.15 a	1.9 a	3.29 a	4.53 a	7.11 a
	16	0.81 b	1.78 a	3.66 a	5.29 a	8.13 a	1.24 a	2.28 a	4.48 a	6.4 a	10.26 a	0.92 a	1.67 a	3.08 a	4.33 a	6.94 a
	24	0.15 d	1.07 c	2.94 a	4.54 a	7.33 a	0.69 a	1.74 a	3.94 a	5.85 a	9.7 a	0.47 a	1.22 a	2.69 a	3.94 a	6.59 a
12	12	0.61 c	1.44 b	2.96 a	4.31 a	6.63 a	1.08 a	2.07 a	4.1 a	5.91 a	9.96 a	0.82 a	1.56 a	2.97 a	4.21 a	6.82 a
	16	0.2 d	0.99 c	2.52 b	3.84 a	6.12 a	0.7 b	1.69 a	3.72 a	5.51 a	9.51 a	0.5 a	1.24 a	2.68 a	3.92 a	6.56 a
	24		0.2 e	1.73 d	3.01 c	5.21 b		0.99 b	3.01 a	4.77 a	8.67 a		0.63 b	2.13 a	3.36 a	6.05 a
14	12	0.14 e	0.81 d	2.02 c	3.05 b	4.86 a	0.61 c	1.53 a	3.34 a	4.97 a	8.55 a	0.46 b	1.17 a	2.59 a	3.81 a	6.43 a
	16		0.35 e	1.57 d	2.58 c	4.35 b	0.17 d	1.08 c	2.88 b	4.48 a	7.99 a	0.07 d	0.76 b	2.21 a	3.42 a	6.06 a
	24			0.79 e	1.76 e	3.44 d		0.26 d	2.05 d	3.59 c	6.96 a		0.01 d	1.5 c	2.68 b	5.36 a
16	12		0.32 e	1.3 e	2.1 d	3.52 c	0.18 d	1.01 c	2.57 b	3.97 a	7.03 a	0.09 d	0.76 c	2.15 b	3.33 a	5.94 a
	16			0.87 e	1.66 e	3.02 d		0.51 d	2.07 d	3.43 c	6.4 a		0.28 d	1.69 c	2.84 b	5.45 a
	24			0.14 f	0.89 f	2.17 e			1.19 e	2.48 d	5.29 c			0.85 e	1.95 d	4.57 c

20 psf Lateral Load

Wall Height (ft)	Spacing (in.) o.c.	600S162-(mils)					600S200-(mils)					800S137-(mils)				
		33 ksi		50 ksi			33 ksi		50 ksi			33 ksi		50 ksi		
		33	43	54	68	97	33	43	54	68	97	33	43	54	68	97
8	12	2 a	3.02 a	5.25 a	7.1 a	11.06 a	2.43 a	3.86 a	7.01 a	9.55 a	15.23 a	1.46 a*	2.19 a	3.38 a	4.56 a	7.06 a
	16	1.82 a	2.85 a	5.1 a	6.95 a	10.92 a	2.25 a	3.66 a	6.81 a	9.36 a	15.04 a	1.35 a*	2.09 a	3.29 a	4.48 a	6.98 a
	24	1.47 a	2.53 a	4.79 a	6.65 a	10.62 a	1.88 a	3.27 a	6.42 a	9 a	14.67 a	1.14 a*	1.88 a	3.12 a	4.32 a	6.83 a
9	12	1.85 a	2.87 a	5.11 a	6.96 a	10.92 a	2.26 a	3.65 a	6.73 a	9.25 a	14.84 a	1.37 a*	2.1 a	3.31 a	4.5 a	6.99 a
	16	1.62 a	2.66 a	4.91 a	6.77 a	10.73 a	2.02 a	3.4 a	6.48 a	9.01 a	14.6 a	1.24 a*	1.97 a	3.2 a	4.39 a	6.9 a
	24	1.18 a	2.25 a	4.52 a	6.38 a	10.35 a	1.56 a	2.91 a	5.98 a	8.54 a	14.12 a	0.96 a*	1.71 a	2.98 a	4.19 a	6.7 a
10	12	1.67 a	2.71 a	4.94 a	6.8 a	10.75 a	2.06 a	3.41 a	6.41 a	8.89 a	14.37 a	1.27 a*	2.01 a	3.23 a	4.42 a	6.92 a
	16	1.4 a	2.45 a	4.69 a	6.55 a	10.5 a	1.77 a	3.11 a	6.1 a	8.59 a	14.07 a	1.1 a*	1.84 a	3.09 a	4.29 a	6.8 a
	24	0.86 a	1.94 a	4.2 a	6.06 a	10.02 a	1.22 a	2.51 a	5.49 a	8.02 a	13.47 a	0.77 a*	1.52 a	2.83 a	4.03 a	6.55 a
12	12	1.25 a	2.28 a	4.48 a	6.37 a	10.3 a	1.6 a	2.86 a	5.63 a	8 a	13.16 a	1.04 a*	1.78 a	3.03 a	4.23 a	6.74 a
	16	0.88 a	1.92 a	4.11 a	6 a	9.92 a	1.22 a	2.44 a	5.19 a	7.58 a	12.72 a	0.8 a*	1.55 a	2.84 a	4.04 a	6.56 a
	24	0.19 c	1.24 a	3.43 a	5.3 a	9.19 a	0.5 b	1.66 a	4.37 a	6.77 a	11.86 a	0.33 a*	1.09 a	2.46 a	3.67 a	6.2 a
14	12	0.79 a	1.78 a	3.79 a	5.58 a	9.63 a	1.11 a	2.24 a	4.71 a	6.92 a	11.64 a	0.77 a*	1.51 a	2.8 a	4 a	6.52 a
	16	0.35 c	1.33 b	3.33 a	5.1 a	9.09 a	0.64 b	1.73 a	4.18 a	6.38 a	11.06 a	0.45 a*	1.19 a	2.54 a	3.74 a	6.26 a
	24		0.52 d	2.5 c	4.21 a	8.09 a		0.79 c	3.19 b	5.39 a	9.97 a		0.59 a	2.02 a	3.24 a	5.77 a
16	12	0.35 c	1.26 b	3.03 a	4.64 a	8.22 a	0.62 c	1.62 a	3.76 a	5.75 a	9.94 a	0.46 a*	1.2 a	2.53 a	3.73 a	6.24 a
	16		0.75 d	2.52 c	4.08 a	7.58 a	0.1 d	1.04 c	3.16 b	5.14 a	9.25 a	0.07 b*	0.8 a	2.18 a	3.39 a	5.9 a
	24			1.6 d	3.09 c	6.44 b		0.01 d	2.09 d	4.03 c	8.01 a		0.06 c	1.53 b	2.74 a	5.25 a

See Combined Axial and Lateral Load Table Notes on page 37.

20 psf Lateral Load

Wall Height (ft)	Spacing (in.) o.c.	800S162-(mils)					800S200-(mils)				
		33 ksi		50 ksi			33 ksi		50 ksi		
		33	43	54	68	97	33	43	54	68	97
8	12	2.1 a*	3.07 a	5.18 a	7 a	11.02 a	2.65 a*	4.14 a	7.42 a	9.99 a	15.7 a
	16	1.97 a*	2.95 a	5.07 a	6.89 a	10.91 a	2.51 a*	4 a	7.28 a	9.86 a	15.58 a
	24	1.71 a*	2.7 a	4.84 a	6.67 a	10.7 a	2.23 a*	3.71 a	6.99 a	9.6 a	15.33 a
9	12	1.99 a*	2.97 a	5.08 a	6.91 a	10.93 a	2.53 a*	4.02 a	7.3 a	9.88 a	15.59 a
	16	1.83 a*	2.81 a	4.94 a	6.77 a	10.79 a	2.36 a*	3.84 a	7.11 a	9.71 a	15.43 a
	24	1.5 a*	2.5 a	4.65 a	6.49 a	10.51 a	2.01 a*	3.47 a	6.75 a	9.38 a	15.11 a
10	12	1.87 a*	2.85 a	4.97 a	6.8 a	10.82 a	2.4 a*	3.88 a	7.15 a	9.75 a	15.46 a
	16	1.67 a*	2.65 a	4.79 a	6.62 a	10.65 a	2.18 a*	3.65 a	6.93 a	9.54 a	15.26 a
	24	1.27 a*	2.27 a	4.44 a	6.27 a	10.3 a	1.75 a*	3.2 a	6.47 a	9.12 a	14.86 a
12	12	1.59 a*	2.57 a	4.71 a	6.53 a	10.55 a	2.09 a*	3.55 a	6.81 a	9.42 a	15.14 a
	16	1.3 a*	2.29 a	4.44 a	6.27 a	10.29 a	1.78 a*	3.22 a	6.47 a	9.11 a	14.83 a
	24	0.74 a*	1.74 a	3.93 a	5.76 a	9.78 a	1.17 a*	2.57 a	5.81 a	8.49 a	14.23 a
14	12	1.25 a*	2.24 a	4.38 a	6.2 a	10.21 a	1.71 a*	3.11 a	6.28 a	8.94 a	14.71 a
	16	0.87 a*	1.86 a	4.02 a	5.84 a	9.84 a	1.3 a*	2.67 a	5.82 a	8.51 a	14.27 a
	24	0.15 b*	1.14 a	3.32 a	5.14 a	9.13 a	0.52 a*	1.83 a	4.94 a	7.66 a	13.41 a
16	12	0.88 a*	1.86 a	3.98 a	5.8 a	9.77 a	1.28 a*	2.59 a	5.55 a	8.13 a	13.78 a
	16	0.41 b*	1.38 a	3.52 a	5.32 a	9.28 a	0.78 a*	2.05 a	4.98 a	7.57 a	13.2 a
	24		0.49 b	2.63 a	4.42 a	8.34 a		1.03 a	3.91 a	6.52 a	12.09 a

See Combined Axial and Lateral Load Table Notes on page 37.

Combined Axial and Lateral Load Tables

SFIA
STEEL FRAMING INDUSTRY ASSOCIATION

25 psf Lateral Load

Wall Height (ft)	Spacing (in.) o.c.	350S162-(mils)					362S137-(mils)				362S162-(mils)				
		33 ksi		50 ksi			33 ksi		50 ksi		33 ksi		50 ksi		
		33	43	54	68	97	33	43	54	68	33	43	54	68	97
8	12	0.97 a	1.68 a	3.17 a	4.27 a	6.55 a	0.73 a	1.34 a	2.6 a	3.61 a	1.04 a	1.78 a	3.36 a	4.57 a	6.97 a
	16	0.66 b	1.36 a	2.87 a	3.96 a	6.2 a	0.45 b	1.04 a	2.32 a	3.32 a	0.73 a	1.46 a	3.05 a	4.25 a	6.62 a
	24	0.09 d	0.76 c	2.3 b	3.38 a	5.54 a		0.49 c	1.81 b	2.78 a	0.16 c	0.86 b	2.48 a	3.66 a	5.96 a
9	12	0.67 b	1.33 a	2.69 a	3.7 a	5.74 a	0.48 c	1.04 a	2.23 a	3.15 a	0.74 b	1.44 a	2.89 a	3.99 a	6.17 a
	16	0.33 d	0.96 b	2.34 a	3.34 a	5.34 a	0.16 d	0.7 c	1.9 b	2.81 a	0.39 c	1.06 b	2.54 a	3.62 a	5.76 a
	24		0.29 d	1.71 c	2.68 b	4.58 a		0.07 d	1.32 d	2.18 c		0.39 d	1.89 c	2.94 b	4.99 a
10	12	0.39 d	0.99 c	2.21 a	3.12 a	4.92 a	0.23 d	0.74 c	1.84 b	2.67 a	0.46 c	1.09 b	2.42 a	3.4 a	5.34 a
	16	0.02 e	0.59 d	1.84 c	2.72 b	4.47 a		0.37 d	1.49 c	2.29 b	0.08 d	0.68 d	2.03 c	2.99 a	4.88 a
	24			1.17 d	2.02 d	3.66 c			0.85 e	1.61 d			1.34 d	2.26 c	4.04 b
12	12		0.39 e	1.37 d	2.06 c	3.39 b		0.21 e	1.12 d	1.75 c		0.47 d	1.54 d	2.29 c	3.76 a
	16			0.99 e	1.65 d	2.93 c			0.75 e	1.36 d		0.03 e	1.13 e	1.86 d	3.27 c
	24			0.32 f	0.94 e	2.11 e			0.1 f	0.66 e			0.43 f	1.11 e	2.4 d
14	12			0.76 e	1.28 e	2.26 d			0.58 e	1.06 e			0.87 e	1.45 e	2.53 d
	16			0.39 f	0.89 e	1.81 e			0.22 f	0.67 f			0.49 f	1.04 e	2.06 e
	24				0.21 f	1.04 f				0.01 f				0.32 f	1.24 f
16	12			0.34 f	0.73 f	1.47 e			0.2 f	0.56 f			0.41 f	0.85 f	1.67 e
	16				0.37 f	1.05 f				0.2 f			0.05 f	0.47 f	1.22 f
	24					0.34 f									0.47 f

25 psf Lateral Load

Wall Height (ft)	Spacing (in.) o.c.	362S200-(mils)					400S137-(mils)				400S162-(mils)				
		33 ksi		50 ksi			33 ksi		50 ksi		33 ksi		50 ksi		
		33	43	54	68	97	33	43	54	68	33	43	54	68	97
8	12	1.34 a	2.34 a	4.27 a	5.79 a	8.62 a	0.89 a	1.56 a	2.98 a	4.24 a	1.23 a	2.05 a	3.85 a	5.37 a	8.2 a
	16	1 a	1.99 a	3.92 a	5.45 a	8.26 a	0.61 a	1.27 a	2.71 a	3.95 a	0.93 a	1.74 a	3.55 a	5.06 a	7.86 a
	24	0.37 c	1.33 a	3.26 a	4.79 a	7.56 a	0.1 c	0.72 b	2.19 a	3.39 a	0.37 b	1.15 a	2.98 a	4.45 a	7.19 a
9	12	1 a	1.93 a	3.68 a	5.08 a	7.67 a	0.64 a	1.27 a	2.63 a	3.84 a	0.94 a	1.72 a	3.41 a	4.84 a	7.45 a
	16	0.61 c	1.52 a	3.28 a	4.68 a	7.24 a	0.32 c	0.93 b	2.31 a	3.49 a	0.59 b	1.35 a	3.06 a	4.45 a	7.02 a
	24		0.78 c	2.54 b	3.93 a	6.43 a		0.29 d	1.7 c	2.82 b		0.66 c	2.39 b	3.73 a	6.22 a
10	12	0.68 c	1.52 a	3.1 a	4.36 a	6.69 a	0.39 c	0.97 b	2.26 a	3.36 a	0.65 b	1.38 a	2.95 a	4.26 a	6.62 a
	16	0.25 d	1.07 c	2.65 b	3.91 a	6.21 a	0.03 d	0.59 c	1.89 b	2.95 a	0.26 d	0.96 b	2.54 a	3.82 a	6.13 a
	24		0.27 d	1.86 d	3.1 c	5.32 a			1.22 d	2.21 c		0.2 d	1.81 c	3.01 b	5.23 a
12	12	0.11 e	0.79 d	2.01 c	3.01 b	4.82 a		0.41 d	1.51 c	2.37 b	0.13 d	0.72 d	2.03 c	3.06 b	4.94 a
	16		0.3 e	1.55 d	2.53 c	4.29 b			1.09 d	1.91 d		0.25 e	1.58 d	2.56 c	4.38 b
	24			0.74 e	1.7 e	3.36 d			0.37 e	1.11 e			0.78 e	1.69 e	3.39 d
14	12		0.22 e	1.2 e	1.97 d	3.34 c			0.88 e	1.51 d		0.18 e	1.26 e	2.02 d	3.45 c
	16			0.75 e	1.51 e	2.83 d			0.46 f	1.06 e			0.81 e	1.54 e	2.9 d
	24				0.72 f	1.94 e				0.28 f			0.03 f	0.7 f	1.94 e
16	12			0.63 f	1.24 e	2.29 d			0.4 f	0.89 e			0.69 e	1.27 e	2.35 d
	16			0.22 f	0.81 f	1.81 e				0.46 f			0.26 f	0.81 f	1.83 e
	24				0.08 f	0.98 f								0.02 f	0.94 f

See Combined Axial and Lateral Load Table Notes on page 37.

Combined Axial and Lateral Load Tables

SFIA
STEEL FRAMING INDUSTRY ASSOCIATION

25 psf Lateral Load

Wall Height (ft)	Spacing (in.) o.c.	400S200-(mils)					550S162-(mils)					600S137-(mils)				
		33 ksi		50 ksi			33 ksi		50 ksi			33 ksi		50 ksi		
		33	43	54	68	97	33	43	54	68	97	33	43	54	68	97
8	12	1.55 a	2.67 a	4.89 a	6.76 a	10.12 a	1.79 a	2.82 a	5.09 a	6.93 a	10.81 a	1.31 a	2.06 a	3.43 a	4.68 a	7.24 a
	16	1.22 a	2.32 a	4.55 a	6.41 a	9.76 a	1.54 a	2.59 a	4.87 a	6.72 a	10.59 a	1.12 a	1.87 a	3.27 a	4.53 a	7.11 a
	24	0.6 b	1.67 a	3.89 a	5.75 a	9.06 a	1.07 a	2.14 a	4.44 a	6.3 a	10.17 a	0.75 a	1.51 a	2.96 a	4.22 a	6.85 a
9	12	1.23 a	2.28 a	4.34 a	6.1 a	9.21 a	1.56 a	2.59 a	4.86 a	6.73 a	10.6 a	1.15 a	1.9 a	3.29 a	4.54 a	7.12 a
	16	0.84 a	1.87 a	3.92 a	5.68 a	8.77 a	1.26 a	2.31 a	4.58 a	6.45 a	10.32 a	0.91 a	1.67 a	3.09 a	4.34 a	6.95 a
	24	0.14 c	1.12 b	3.16 a	4.89 a	7.93 a	0.69 a	1.76 a	4.04 a	5.91 a	9.76 a	0.46 a	1.21 a	2.7 a	3.96 a	6.61 a
10	12	0.9 a	1.87 a	3.75 a	5.39 a	8.23 a	1.32 a	2.34 a	4.55 a	6.47 a	10.34 a	0.97 a	1.72 a	3.13 a	4.38 a	6.98 a
	16	0.47 c	1.41 b	3.29 a	4.91 a	7.72 a	0.96 a	2 a	4.21 a	6.13 a	9.98 a	0.69 a	1.44 a	2.89 a	4.14 a	6.76 a
	24		0.59 d	2.45 c	4.03 b	6.77 a	0.29 b	1.35 a	3.56 a	5.46 a	9.28 a	0.14 b	0.89 a	2.4 a	3.65 a	6.34 a
12	12	0.3 d	1.1 c	2.62 b	3.95 a	6.24 a	0.79 a	1.78 a	3.82 a	5.61 a	9.62 a	0.58 a	1.32 a	2.75 a	3.99 a	6.62 a
	16		0.58 d	2.11 c	3.41 b	5.65 a	0.34 c	1.33 a	3.36 a	5.13 a	9.08 a	0.2 b	0.93 a	2.4 a	3.64 a	6.3 a
	24			1.2 e	2.45 d	4.59 c		0.5 c	2.51 b	4.24 a	8.07 a		0.2 c	1.73 b	2.96 a	5.68 a
14	12		0.46 e	1.67 d	2.69 c	4.47 b	0.28 d	1.19 b	2.99 a	4.6 a	8.13 a	0.16 c	0.86 b	2.3 a	3.51 a	6.15 a
	16			1.16 e	2.15 d	3.88 c		0.66 d	2.45 c	4.02 b	7.46 a		0.38 c	1.84 b	3.04 a	5.71 a
	24			0.28 f	1.23 e	2.84 e			1.49 d	2.98 d	6.26 b			1 d	2.17 c	4.87 b
16	12			0.97 e	1.76 e	3.14 d		0.63 d	2.19 c	3.57 b	6.55 a		0.4 d	1.8 c	2.96 b	5.57 a
	16			0.49 f	1.26 e	2.57 e		0.06 e	1.61 d	2.94 d	5.82 b			1.25 d	2.38 c	5 b
	24				0.39 f	1.6 f			0.6 e	1.85 e	4.55 d			0.28 e	1.35 e	3.96 d

25 psf Lateral Load

Wall Height (ft)	Spacing (in.) o.c.	600S162-(mils)					600S200-(mils)					800S137-(mils)				
		33 ksi		50 ksi			33 ksi		50 ksi			33 ksi		50 ksi		
		33	43	54	68	97	33	43	54	68	97	33	43	54	68	97
8	12	1.87 a	2.89 a	5.14 a	6.99 a	10.95 a	2.29 a	3.71 a	6.86 a	9.41 a	15.09 a	1.38 a*	2.11 a	3.31 a	4.5 a	7 a
	16	1.64 a	2.69 a	4.94 a	6.8 a	10.77 a	2.06 a	3.46 a	6.61 a	9.18 a	14.86 a	1.25 a*	1.98 a	3.21 a	4.4 a	6.91 a
	24	1.21 a	2.28 a	4.56 a	6.43 a	10.4 a	1.6 a	2.98 a	6.12 a	8.72 a	14.4 a	0.98 a*	1.72 a	3 a	4.2 a	6.72 a
9	12	1.68 a	2.71 a	4.96 a	6.82 a	10.78 a	2.08 a	3.46 a	6.54 a	9.07 a	14.66 a	1.27 a*	2.01 a	3.23 a	4.42 a	6.92 a
	16	1.4 a	2.45 a	4.71 a	6.57 a	10.54 a	1.79 a	3.15 a	6.23 a	8.78 a	14.36 a	1.1 a*	1.84 a	3.09 a	4.29 a	6.8 a
	24	0.86 a	1.95 a	4.22 a	6.09 a	10.06 a	1.23 a	2.55 a	5.62 a	8.19 a	13.77 a	0.76 a*	1.51 a	2.82 a	4.03 a	6.55 a
10	12	1.46 a	2.51 a	4.75 a	6.61 a	10.57 a	1.84 a	3.18 a	6.17 a	8.67 a	14.14 a	1.15 a*	1.88 a	3.13 a	4.32 a	6.83 a
	16	1.13 a	2.19 a	4.44 a	6.3 a	10.26 a	1.49 a	2.81 a	5.79 a	8.3 a	13.77 a	0.93 a*	1.68 a	2.96 a	4.16 a	6.68 a
	24	0.48 a	1.58 a	3.84 a	5.71 a	9.66 a	0.82 a	2.08 a	5.05 a	7.59 a	13.03 a	0.52 a*	1.28 a	2.63 a	3.84 a	6.37 a
12	12	0.97 a	2.01 a	4.2 a	6.09 a	10.02 a	1.31 a	2.55 a	5.3 a	7.68 a	12.83 a	0.86 a*	1.6 a	2.89 a	4.09 a	6.6 a
	16	0.53 b	1.58 a	3.77 a	5.64 a	9.55 a	0.85 a	2.04 a	4.78 a	7.17 a	12.29 a	0.56 a*	1.31 a	2.65 a	3.86 a	6.38 a
	24		0.76 b	2.94 a	4.79 a	8.66 a		1.1 b	3.79 a	6.2 a	11.25 a		0.75 a	2.17 a	3.4 a	5.94 a
14	12	0.45 c	1.44 a	3.44 a	5.21 a	9.22 a	0.76 b	1.86 a	4.31 a	6.51 a	11.2 a	0.53 a*	1.27 a	2.6 a	3.81 a	6.33 a
	16		0.91 c	2.9 b	4.65 a	8.58 a	0.21 c	1.25 b	3.67 a	5.87 a	10.5 a	0.14 a*	0.89 a	2.28 a	3.49 a	6.02 a
	24			1.92 d	3.6 c	7.39 a		0.15 d	2.52 c	4.7 b	9.21 a		0.16 b	1.65 a	2.87 a	5.41 a
16	12		0.87 c	2.64 b	4.22 a	7.74 a	0.23 d	1.18 c	3.31 a	5.29 a	9.42 a	0.17 b*	0.9 a	2.27 a	3.47 a	5.99 a
	16		0.29 d	2.04 d	3.57 c	6.99 a		0.5 d	2.61 c	4.57 b	8.61 a		0.43 b	1.85 a	3.06 a	5.58 a
	24			0.98 e	2.42 d	5.67 c			1.37 d	3.28 d	7.16 b			1.06 c	2.27 b	4.78 a

See Combined Axial and Lateral Load Table Notes on page 37.

Combined Axial and Lateral Load Tables

SFIA
STEEL FRAMING INDUSTRY ASSOCIATION

25 psf Lateral Load

Wall Height (ft)	Spacing (in.) o.c.	800S162-(mils)					800S200-(mils)				
		33 ksi		50 ksi			33 ksi		50 ksi		
		33	43	54	68	97	33	43	54	68	97
8	12	2 a*	2.98 a	5.09 a	6.92 a	10.94 a	2.55 a*	4.03 a	7.31 a	9.89 a	15.61 a
	16	1.84 a*	2.82 a	4.95 a	6.78 a	10.81 a	2.37 a*	3.85 a	7.14 a	9.73 a	15.45 a
	24	1.52 a*	2.52 a	4.67 a	6.51 a	10.54 a	2.03 a*	3.49 a	6.78 a	9.41 a	15.14 a
9	12	1.87 a*	2.85 a	4.97 a	6.8 a	10.82 a	2.4 a*	3.88 a	7.16 a	9.75 a	15.47 a
	16	1.66 a*	2.65 a	4.79 a	6.62 a	10.65 a	2.18 a*	3.65 a	6.93 a	9.54 a	15.27 a
	24	1.26 a*	2.26 a	4.44 a	6.28 a	10.31 a	1.75 a*	3.2 a	6.48 a	9.13 a	14.87 a
10	12	1.72 a*	2.7 a	4.84 a	6.67 a	10.69 a	2.24 a*	3.71 a	6.98 a	9.59 a	15.31 a
	16	1.47 a*	2.46 a	4.61 a	6.45 a	10.47 a	1.97 a*	3.42 a	6.7 a	9.33 a	15.06 a
	24	0.97 a*	1.98 a	4.17 a	6.01 a	10.04 a	1.43 a*	2.86 a	6.13 a	8.81 a	14.56 a
12	12	1.37 a*	2.36 a	4.51 a	6.34 a	10.36 a	1.86 a*	3.3 a	6.55 a	9.19 a	14.91 a
	16	1.02 a*	2.01 a	4.18 a	6.02 a	10.04 a	1.48 a*	2.89 a	6.13 a	8.8 a	14.53 a
	24	0.33 a*	1.34 a	3.55 a	5.39 a	9.4 a	0.73 a*	2.1 a	5.32 a	8.04 a	13.78 a
14	12	0.97 a*	1.96 a	4.11 a	5.93 a	9.94 a	1.4 a*	2.78 a	5.93 a	8.61 a	14.38 a
	16	0.51 a*	1.49 a	3.66 a	5.49 a	9.48 a	0.91 a*	2.24 a	5.37 a	8.08 a	13.84 a
	24		0.62 a	2.82 a	4.64 a	8.6 a		1.22 a	4.3 a	7.05 a	12.79 a
16	12	0.53 a*	1.5 a	3.63 a	5.44 a	9.4 a	0.91 a*	2.18 a	5.12 a	7.71 a	13.34 a
	16		0.93 a	3.07 a	4.87 a	8.8 a	0.31 b*	1.53 a	4.44 a	7.04 a	12.64 a
	24			2.01 b	3.78 a	7.66 a		0.32 c	3.15 a	5.77 a	11.3 a

See Combined Axial and Lateral Load Table Notes on page 37.

Combined Axial and Lateral Load Tables

SFIA
STEEL FRAMING INDUSTRY ASSOCIATION

30 psf Lateral Load

Wall Height (ft)	Spacing (in.) o.c.	350S162-(mils)					362S137-(mils)				362S162-(mils)				
		33 ksi		50 ksi			33 ksi		50 ksi		33 ksi		50 ksi		
		33	43	54	68	97	33	43	54	68	33	43	54	68	97
8	12	0.78 a	1.49 a	2.99 a	4.08 a	6.34 a	0.56 b	1.16 a	2.43 a	3.44 a	0.85 a	1.59 a	3.17 a	4.38 a	6.76 a
	16	0.43 c	1.11 b	2.64 a	3.72 a	5.93 a	0.24 c	0.81 b	2.11 a	3.1 a	0.5 b	1.21 a	2.82 a	4.01 a	6.35 a
	24		0.42 d	1.98 c	3.05 a	5.16 a		0.18 d	1.52 c	2.47 b		0.52 c	2.16 b	3.32 a	5.58 a
9	12	0.46 c	1.11 b	2.48 a	3.48 a	5.5 a	0.28 c	0.83 b	2.03 a	2.94 a	0.53 c	1.21 a	2.68 a	3.77 a	5.92 a
	16	0.07 d	0.69 c	2.08 b	3.06 a	5.02 a		0.44 d	1.66 c	2.55 b	0.13 d	0.78 c	2.27 b	3.34 a	5.44 a
	24			1.37 d	2.31 c	4.16 b			0.99 d	1.84 d		0.02 d	1.54 d	2.57 c	4.56 a
10	12	0.17 d	0.74 c	1.99 b	2.88 a	4.65 a	0.02 e	0.51 d	1.62 c	2.44 b	0.23 d	0.84 c	2.18 b	3.15 a	5.06 a
	16		0.29 d	1.56 d	2.43 c	4.13 a		0.09 e	1.22 d	2.01 c		0.38 d	1.74 c	2.69 b	4.53 a
	24			0.81 e	1.63 d	3.22 c			0.51 e	1.25 e			0.96 e	1.86 d	3.58 c
12	12		0.13 e	1.13 e	1.81 d	3.11 c			0.89 e	1.51 d		0.2 e	1.29 d	2.03 d	3.46 b
	16			0.71 e	1.35 e	2.58 d			0.48 e	1.06 e			0.84 e	1.55 e	2.9 d
	24				0.56 f	1.67 e				0.29 f			0.05 f	0.71 f	1.94 e
14	12			0.53 f	1.04 e	1.99 d			0.35 f	0.82 e			0.64 f	1.2 e	2.24 d
	16			0.13 f	0.6 f	1.49 e				0.39 f			0.2 f	0.73 f	1.71 e
	24					0.63 f									0.8 f
16	12			0.13 f	0.51 f	1.21 e				0.34 f			0.19 f	0.62 f	1.39 e
	16				0.11 f	0.75 f								0.19 f	0.9 f
	24														0.07 f

30 psf Lateral Load

Wall Height (ft)	Spacing (in.) o.c.	362S200-(mils)					400S137-(mils)				400S162-(mils)				
		33 ksi		50 ksi			33 ksi		50 ksi		33 ksi		50 ksi		
		33	43	54	68	97	33	43	54	68	33	43	54	68	97
8	12	1.13 a	2.13 a	4.06 a	5.58 a	8.4 a	0.72 a	1.38 a	2.81 a	4.06 a	1.05 a	1.86 a	3.67 a	5.18 a	7.99 a
	16	0.74 b	1.71 a	3.65 a	5.18 a	7.97 a	0.4 b	1.04 a	2.5 a	3.72 a	0.7 a	1.5 a	3.32 a	4.81 a	7.58 a
	24	0.02 d	0.95 b	2.89 a	4.42 a	7.17 a		0.41 c	1.9 b	3.07 a	0.05 c	0.81 b	2.66 a	4.1 a	6.8 a
9	12	0.76 b	1.68 a	3.44 a	4.84 a	7.41 a	0.44 b	1.06 a	2.43 a	3.63 a	0.73 b	1.49 a	3.2 a	4.6 a	7.19 a
	16	0.32 c	1.21 b	2.97 a	4.37 a	6.91 a	0.07 d	0.67 c	2.06 a	3.21 a	0.33 c	1.07 b	2.78 a	4.16 a	6.7 a
	24		0.37 d	2.13 c	3.51 b	5.98 a			1.37 c	2.45 c		0.28 d	2.02 c	3.33 b	5.77 a
10	12	0.42 c	1.25 b	2.83 a	4.09 a	6.4 a	0.17 d	0.74 c	2.03 b	3.11 a	0.41 c	1.12 b	2.7 a	3.99 a	6.33 a
	16		0.74 d	2.32 c	3.58 b	5.84 a		0.3 d	1.61 c	2.65 b		0.64 c	2.24 b	3.48 a	5.76 a
	24			1.43 d	2.66 d	4.83 b			0.85 e	1.81 d			1.4 d	2.57 c	4.73 b
12	12		0.49 d	1.73 d	2.72 c	4.49 a		0.14 e	1.26 d	2.09 c		0.43 d	1.75 d	2.76 c	4.6 a
	16			1.21 e	2.19 d	3.9 c			0.79 e	1.58 d			1.25 e	2.2 d	3.96 c
	24			0.32 f	1.26 e	2.86 d				0.68 e			0.36 f	1.23 e	2.86 d
14	12			0.92 e	1.69 e	3.03 d			0.62 e	1.24 e			0.98 e	1.73 d	3.11 c
	16			0.43 f	1.18 e	2.45 e			0.15 f	0.73 f			0.48 f	1.18 e	2.49 d
	24				0.31 f	1.47 f								0.25 f	1.43 e
16	12			0.38 f	0.98 f	1.99 e			0.16 f	0.62 f			0.42 f	0.98 e	2.03 e
	16				0.5 f	1.46 f				0.15 f				0.48 f	1.45 e
	24					0.54 f									0.46 f

See Combined Axial and Lateral Load Table Notes on page 37.

Combined Axial and Lateral Load Tables

SFIA
STEEL FRAMING INDUSTRY ASSOCIATION

30 psf Lateral Load

Wall Height (ft)	Spacing (in.) o.c.	400S200-(mils)					550S162-(mils)					600S137-(mils)				
		33 ksi		50 ksi			33 ksi		50 ksi			33 ksi		50 ksi		
		33	43	54	68	97	33	43	54	68	97	33	43	54	68	97
8	12	1.35 a	2.46 a	4.68 a	6.55 a	9.9 a	1.64 a	2.68 a	4.96 a	6.81 a	10.68 a	1.19 a	1.95 a	3.34 a	4.59 a	7.16 a
	16	0.97 a	2.06 a	4.28 a	6.14 a	9.48 a	1.35 a	2.41 a	4.7 a	6.55 a	10.42 a	0.97 a	1.73 a	3.15 a	4.4 a	7 a
	24	0.26 c	1.3 a	3.52 a	5.37 a	8.66 a	0.79 a	1.88 a	4.19 a	6.05 a	9.92 a	0.53 a	1.3 a	2.78 a	4.04 a	6.69 a
9	12	0.99 a	2.03 a	4.09 a	5.84 a	8.94 a	1.38 a	2.42 a	4.69 a	6.56 a	10.43 a	1.01 a	1.76 a	3.17 a	4.42 a	7.02 a
	16	0.55 b	1.56 a	3.61 a	5.36 a	8.43 a	1.03 a	2.09 a	4.36 a	6.23 a	10.09 a	0.73 a	1.48 a	2.93 a	4.19 a	6.81 a
	24		0.7 c	2.73 b	4.45 a	7.45 a	0.35 a	1.44 a	3.72 a	5.59 a	9.44 a	0.19 a	0.95 a	2.47 a	3.73 a	6.41 a
10	12	0.64 b	1.59 a	3.47 a	5.1 a	7.92 a	1.1 a	2.14 a	4.34 a	6.26 a	10.12 a	0.8 a	1.55 a	2.98 a	4.23 a	6.85 a
	16	0.15 d	1.07 c	2.94 a	4.54 a	7.33 a	0.69 a	1.74 a	3.94 a	5.85 a	9.7 a	0.47 a	1.22 a	2.69 a	3.94 a	6.59 a
	24		0.13 d	1.98 c	3.54 c	6.24 a		0.97 b	3.18 a	5.07 a	8.88 a		0.58 a	2.12 a	3.37 a	6.09 a
12	12		0.78 d	2.31 c	3.62 b	5.88 a	0.52 b	1.51 a	3.54 a	5.32 a	9.29 a	0.35 b	1.08 a	2.54 a	3.78 a	6.43 a
	16		0.2 e	1.73 d	3.01 c	5.21 b		0.99 b	3.01 a	4.77 a	8.67 a		0.63 b	2.13 a	3.36 a	6.05 a
	24			0.71 e	1.93 e	4.02 d		0.04 d	2.04 c	3.74 b	7.5 a			1.35 c	2.57 b	5.31 a
14	12		0.13 e	1.36 e	2.36 d	4.11 c		0.86 c	2.66 b	4.24 a	7.72 a		0.57 c	2.02 b	3.23 a	5.88 a
	16			0.79 e	1.76 e	3.44 d		0.26 d	2.05 d	3.59 c	6.96 a		0.01 d	1.5 c	2.68 b	5.36 a
	24				0.74 f	2.29 e			0.96 e	2.42 d	5.6 c			0.54 e	1.68 d	4.39 c
16	12			0.68 f	1.45 e	2.79 d		0.28 e	1.84 d	3.18 c	6.11 b		0.05 d	1.47 d	2.61 c	5.22 a
	16			0.14 f	0.89 f	2.17 e			1.19 e	2.48 d	5.29 c			0.85 e	1.95 d	4.57 c
	24					1.09 f			0.07 f	1.26 e	3.86 e				0.79 e	3.39 d

30 psf Lateral Load

Wall Height (ft)	Spacing (in.) o.c.	600S162-(mils)					600S200-(mils)					800S137-(mils)				
		33 ksi		50 ksi			33 ksi		50 ksi			33 ksi		50 ksi		
		33	43	54	68	97	33	43	54	68	97	33	43	54	68	97
8	12	1.73 a	2.77 a	5.02 a	6.88 a	10.84 a	2.15 a	3.56 a	6.71 a	9.27 a	14.95 a	1.3 a*	2.03 a	3.25 a	4.44 a	6.94 a
	16	1.47 a	2.53 a	4.79 a	6.65 a	10.62 a	1.88 a	3.27 a	6.42 a	9 a	14.67 a	1.14 a*	1.88 a	3.12 a	4.32 a	6.83 a
	24	0.95 a	2.05 a	4.33 a	6.21 a	10.18 a	1.34 a	2.69 a	5.84 a	8.45 a	14.12 a	0.82 a*	1.57 a	2.87 a	4.08 a	6.6 a
9	12	1.51 a	2.56 a	4.81 a	6.67 a	10.63 a	1.9 a	3.27 a	6.35 a	8.89 a	14.48 a	1.17 a*	1.91 a	3.14 a	4.34 a	6.85 a
	16	1.18 a	2.25 a	4.52 a	6.38 a	10.35 a	1.56 a	2.91 a	5.98 a	8.54 a	14.12 a	0.96 a*	1.71 a	2.98 a	4.19 a	6.7 a
	24	0.54 a	1.65 a	3.94 a	5.81 a	9.78 a	0.9 a	2.2 a	5.26 a	7.85 a	13.42 a	0.56 a*	1.32 a	2.67 a	3.88 a	6.41 a
10	12	1.26 a	2.32 a	4.57 a	6.43 a	10.38 a	1.63 a	2.96 a	5.94 a	8.45 a	13.92 a	1.02 a*	1.76 a	3.03 a	4.23 a	6.74 a
	16	0.86 a	1.94 a	4.2 a	6.06 a	10.02 a	1.22 a	2.51 a	5.49 a	8.02 a	13.47 a	0.77 a*	1.52 a	2.83 a	4.03 a	6.55 a
	24	0.11 b	1.22 a	3.5 a	5.36 a	9.31 a	0.44 a	1.67 a	4.62 a	7.18 a	12.6 a	0.28 a*	1.04 a	2.43 a	3.65 a	6.19 a
12	12	0.7 a	1.75 a	3.94 a	5.82 a	9.74 a	1.03 a	2.24 a	4.98 a	7.37 a	12.5 a	0.68 a*	1.43 a	2.74 a	3.95 a	6.47 a
	16	0.19 c	1.24 a	3.43 a	5.3 a	9.19 a	0.5 b	1.66 a	4.37 a	6.77 a	11.86 a	0.33 a*	1.09 a	2.46 a	3.67 a	6.2 a
	24		0.31 c	2.47 b	4.31 a	8.15 a		0.57 c	3.24 b	5.65 a	10.66 a		0.42 a	1.9 a	3.13 a	5.67 a
14	12	0.14 c	1.12 b	3.11 a	4.87 a	8.83 a	0.42 c	1.48 a	3.92 a	6.13 a	10.78 a	0.29 a*	1.04 a	2.41 a	3.62 a	6.14 a
	16		0.52 d	2.5 c	4.21 a	8.09 a		0.79 c	3.19 b	5.39 a	9.97 a		0.59 a	2.02 a	3.24 a	5.77 a
	24			1.38 d	3.02 c	6.74 b			1.88 d	4.06 c	8.49 a			1.28 b	2.51 a	5.05 a
16	12		0.51 d	2.28 c	3.82 b	7.28 a		0.77 c	2.88 b	4.85 a	8.92 a		0.61 a	2.02 a	3.22 a	5.74 a
	16			1.6 d	3.09 c	6.44 b		0.01 d	2.09 d	4.03 c	8.01 a		0.06 c	1.53 b	2.74 a	5.25 a
	24			0.4 e	1.8 e	4.95 d			0.7 e	2.59 d	6.38 c			0.61 d	1.81 c	4.32 a

See Combined Axial and Lateral Load Table Notes on page 37.

30 psf Lateral Load

Wall Height (ft)	Spacing (in.) o.c.	800S162-(mils)					800S200-(mils)				
		33 ksi		50 ksi			33 ksi		50 ksi		
		33	43	54	68	97	33	43	54	68	97
8	12	1.9 a*	2.89 a	5.01 a	6.84 a	10.86 a	2.44 a*	3.93 a	7.21 a	9.8 a	15.52 a
	16	1.71 a*	2.7 a	4.84 a	6.67 a	10.7 a	2.23 a*	3.71 a	6.99 a	9.6 a	15.33 a
	24	1.33 a*	2.33 a	4.5 a	6.34 a	10.38 a	1.82 a*	3.28 a	6.57 a	9.22 a	14.96 a
9	12	1.75 a*	2.73 a	4.87 a	6.69 a	10.72 a	2.27 a*	3.74 a	7.02 a	9.63 a	15.35 a
	16	1.5 a*	2.5 a	4.65 a	6.49 a	10.51 a	2.01 a*	3.47 a	6.75 a	9.38 a	15.11 a
	24	1.02 a*	2.03 a	4.22 a	6.07 a	10.1 a	1.49 a*	2.92 a	6.21 a	8.88 a	14.64 a
10	12	1.57 a*	2.56 a	4.7 a	6.53 a	10.56 a	2.07 a*	3.54 a	6.81 a	9.43 a	15.16 a
	16	1.27 a*	2.27 a	4.44 a	6.27 a	10.3 a	1.75 a*	3.2 a	6.47 a	9.12 a	14.86 a
	24	0.68 a*	1.7 a	3.91 a	5.75 a	9.79 a	1.12 a*	2.53 a	5.8 a	8.5 a	14.26 a
12	12	1.16 a*	2.15 a	4.31 a	6.15 a	10.17 a	1.63 a*	3.05 a	6.3 a	8.95 a	14.68 a
	16	0.74 a*	1.74 a	3.93 a	5.76 a	9.78 a	1.17 a*	2.57 a	5.81 a	8.49 a	14.23 a
	24		0.95 a	3.17 a	5.02 a	9.03 a	0.31 a*	1.64 a	4.85 a	7.59 a	13.34 a
14	12	0.69 a*	1.68 a	3.84 a	5.67 a	9.66 a	1.1 a*	2.46 a	5.59 a	8.29 a	14.05 a
	16	0.15 b*	1.14 a	3.32 a	5.14 a	9.13 a	0.52 a*	1.83 a	4.94 a	7.66 a	13.41 a
	24		0.12 b	2.33 a	4.14 a	8.09 a		0.64 a	3.69 a	6.45 a	12.18 a
16	12	0.19 b*	1.15 a	3.29 a	5.09 a	9.04 a	0.54 a*	1.79 a	4.71 a	7.3 a	12.92 a
	16		0.49 b	2.63 a	4.42 a	8.34 a		1.03 a	3.91 a	6.52 a	12.09 a
	24			1.41 c	3.16 b	7 a			2.44 b	5.06 a	10.53 a

See Combined Axial and Lateral Load Table Notes on page 37.

Combined Axial and Lateral Load Tables

SFIA
STEEL FRAMING INDUSTRY ASSOCIATION

35 psf Lateral Load

Wall Height (ft)	Spacing (in.) o.c.	350S162-(mils)					362S137-(mils)				362S162-(mils)				
		33 ksi		50 ksi			33 ksi		50 ksi		33 ksi		50 ksi		
		33	43	54	68	97	33	43	54	68	33	43	54	68	97
8	12	0.6 b	1.3 a	2.81 a	3.9 a	6.13 a	0.4 b	0.98 a	2.27 a	3.27 a	0.67 b	1.4 a	2.99 a	4.19 a	6.55 a
	16	0.2 d	0.87 b	2.41 a	3.49 a	5.67 a	0.03 d	0.59 c	1.91 b	2.88 a	0.27 c	0.98 b	2.59 a	3.77 a	6.09 a
	24		0.11 d	1.68 c	2.73 b	4.8 a			1.24 d	2.17 c		0.2 d	1.85 c	3 b	5.21 a
9	12	0.26 d	0.89 c	2.28 b	3.27 a	5.26 a	0.1 d	0.63 c	1.84 b	2.74 a	0.33 c	0.99 b	2.47 a	3.55 a	5.68 a
	16		0.42 d	1.83 c	2.8 b	4.73 a		0.19 d	1.43 c	2.3 b		0.52 d	2.02 c	3.07 b	5.14 a
	24			1.04 e	1.96 d	3.76 c			0.68 e	1.51 d			1.2 d	2.2 d	4.15 b
10	12		0.51 d	1.77 c	2.65 b	4.39 a		0.29 d	1.42 c	2.22 c	0.01 e	0.6 d	1.96 c	2.92 b	4.79 a
	16		0.01 e	1.3 d	2.15 d	3.82 b			0.97 d	1.74 d		0.09 e	1.47 d	2.4 c	4.2 b
	24			0.47 e	1.27 e	2.8 d			0.19 e	0.9 e			0.61 e	1.48 e	3.15 d
12	12			0.91 e	1.58 d	2.84 c			0.68 e	1.28 e			1.06 e	1.78 d	3.17 c
	16			0.44 f	1.07 e	2.26 d			0.22 f	0.79 e			0.56 e	1.25 e	2.56 d
	24				0.21 f	1.26 e								0.34 f	1.51 e
14	12			0.32 f	0.82 f	1.73 e			0.15 f	0.6 f			0.41 f	0.96 e	1.97 e
	16				0.34 f	1.18 f				0.13 f				0.45 f	1.39 e
	24					0.25 f									0.4 f
16	12				0.3 f	0.97 f				0.13 f				0.39 f	1.14 f
	16					0.47 f									0.61 f
	24														

35 psf Lateral Load

Wall Height (ft)	Spacing (in.) o.c.	362S200-(mils)					400S137-(mils)				400S162-(mils)				
		33 ksi		50 ksi			33 ksi		50 ksi		33 ksi		50 ksi		
		33	43	54	68	97	33	43	54	68	33	43	54	68	97
8	12	0.93 a	1.92 a	3.85 a	5.38 a	8.18 a	0.56 a	1.21 a	2.65 a	3.89 a	0.87 a	1.68 a	3.49 a	4.99 a	7.79 a
	16	0.49 b	1.45 a	3.39 a	4.92 a	7.7 a	0.2 c	0.83 a	2.29 a	3.5 a	0.47 b	1.26 a	3.09 a	4.57 a	7.32 a
	24		0.6 c	2.54 b	4.07 a	6.78 a		0.11 c	1.62 c	2.77 a		0.49 c	2.34 b	3.76 a	6.43 a
9	12	0.54 c	1.44 a	3.2 a	4.6 a	7.16 a	0.25 c	0.86 b	2.24 a	3.42 a	0.52 b	1.28 a	2.99 a	4.38 a	6.94 a
	16	0.05 d	0.92 c	2.68 b	4.07 a	6.59 a		0.42 c	1.82 b	2.95 a	0.07 d	0.79 c	2.52 a	3.87 a	6.38 a
	24			1.74 d	3.12 c	5.54 a			1.05 d	2.09 c			1.66 c	2.94 c	5.34 a
10	12	0.17 d	0.99 c	2.57 b	3.83 a	6.11 a		0.51 c	1.82 b	2.87 a	0.19 d	0.88 c	2.47 b	3.73 a	6.04 a
	16		0.42 d	2.01 c	3.26 b	5.49 a		0.02 d	1.35 d	2.35 c		0.35 d	1.95 c	3.17 b	5.41 a
	24			1.02 e	2.24 d	4.37 c			0.5 e	1.42 d			1.02 e	2.15 d	4.26 c
12	12		0.21 e	1.46 d	2.45 d	4.19 b			1.02 e	1.82 d		0.16 e	1.49 d	2.47 c	4.27 b
	16			0.9 e	1.86 e	3.54 d			0.5 e	1.26 e			0.93 e	1.86 d	3.58 c
	24				0.84 f	2.39 e				0.28 f				0.79 e	2.36 e
14	12			0.67 e	1.43 e	2.73 d			0.38 f	0.98 e			0.72 e	1.45 e	2.79 d
	16			0.14 f	0.87 f	2.11 e				0.43 f			0.17 f	0.85 f	2.12 e
	24					1.03 f									0.96 f
16	12			0.14 f	0.73 f	1.72 e				0.38 f			0.18 f	0.72 f	1.73 e
	16				0.21 f	1.13 f								0.17 f	1.1 f
	24					0.14 f									0.03 f

See Combined Axial and Lateral Load Table Notes on page 37.

Combined Axial and Lateral Load Tables

SFIA
STEEL FRAMING INDUSTRY ASSOCIATION

35 psf Lateral Load

Wall Height (ft)	Spacing (in.) o.c.	400S200-(mils)					550S162-(mils)					600S137-(mils)				
		33 ksi		50 ksi			33 ksi		50 ksi			33 ksi		50 ksi		
		33	43	54	68	97	33	43	54	68	97	33	43	54	68	97
8	12	1.16 a	2.26 a	4.48 a	6.34 a	9.69 a	1.49 a	2.54 a	4.83 a	6.68 a	10.55 a	1.08 a	1.84 a	3.24 a	4.49 a	7.08 a
	16	0.72 a	1.8 a	4.02 a	5.88 a	9.2 a	1.16 a	2.23 a	4.53 a	6.38 a	10.25 a	0.82 a	1.58 a	3.03 a	4.28 a	6.9 a
	24		0.95 b	3.15 a	5 a	8.26 a	0.52 a	1.63 a	3.94 a	5.8 a	9.67 a	0.32 a	1.09 a	2.6 a	3.86 a	6.53 a
9	12	0.77 b	1.79 a	3.84 a	5.6 a	8.68 a	1.2 a	2.25 a	4.53 a	6.4 a	10.26 a	0.87 a	1.62 a	3.05 a	4.31 a	6.92 a
	16	0.27 c	1.26 b	3.31 a	5.04 a	8.09 a	0.8 a	1.87 a	4.15 a	6.02 a	9.87 a	0.55 a	1.3 a	2.78 a	4.03 a	6.68 a
	24		0.3 d	2.32 c	4.03 b	6.99 a	0.03 b	1.13 a	3.41 a	5.28 a	9.12 a		0.69 a	2.24 a	3.5 a	6.21 a
10	12	0.39 c	1.33 b	3.2 a	4.81 a	7.62 a	0.89 a	1.93 a	4.14 a	6.06 a	9.91 a	0.63 a	1.38 a	2.84 a	4.09 a	6.72 a
	16		0.74 c	2.61 b	4.2 a	6.95 a	0.42 b	1.48 a	3.69 a	5.59 a	9.42 a	0.25 a	1 a	2.5 a	3.75 a	6.42 a
	24			1.54 d	3.08 c	5.73 b		0.61 b	2.82 a	4.69 a	8.48 a		0.27 b	1.84 a	3.09 a	5.84 a
12	12		0.49 d	2.01 c	3.3 c	5.54 a	0.25 c	1.24 b	3.27 a	5.04 a	8.98 a	0.13 c	0.85 a	2.33 a	3.57 a	6.24 a
	16			1.37 d	2.63 d	4.79 b		0.66 c	2.68 b	4.41 a	8.27 a		0.34 c	1.86 b	3.09 a	5.8 a
	24			0.26 e	1.45 e	3.48 d			1.59 d	3.26 c	6.95 a			0.98 d	2.19 c	4.96 a
14	12			1.06 e	2.05 d	3.76 c		0.56 d	2.35 c	3.91 b	7.33 a		0.28 d	1.75 c	2.95 a	5.62 a
	16			0.44 f	1.4 e	3.03 d			1.67 d	3.18 c	6.49 b			1.16 d	2.33 c	5.03 a
	24				0.28 f	1.77 e			0.47 e	1.88 e	4.98 d			0.1 e	1.21 d	3.94 c
16	12			0.4 f	1.16 e	2.47 e			1.5 d	2.82 d	5.69 b			1.15 d	2.27 c	4.89 b
	16				0.55 f	1.79 e			0.79 e	2.05 e	4.79 d			0.47 e	1.55 d	4.16 c
	24					0.62 f				0.72 f	3.22 e				0.27 e	2.86 e

35 psf Lateral Load

Wall Height (ft)	Spacing (in.) o.c.	600S162-(mils)					600S200-(mils)					800S137-(mils)				
		33 ksi		50 ksi			33 ksi		50 ksi			33 ksi		50 ksi		
		33	43	54	68	97	33	43	54	68	97	33	43	54	68	97
8	12	1.6 a	2.65 a	4.9 a	6.76 a	10.73 a	2.01 a	3.41 a	6.56 a	9.13 a	14.81 a	1.22 a*	1.96 a	3.19 a	4.38 a	6.89 a
	16	1.3 a	2.36 a	4.64 a	6.5 a	10.47 a	1.7 a	3.07 a	6.22 a	8.81 a	14.49 a	1.03 a*	1.78 a	3.04 a	4.24 a	6.75 a
	24	0.7 a	1.81 a	4.11 a	5.99 a	9.97 a	1.07 a	2.41 a	5.55 a	8.18 a	13.85 a	0.66 a*	1.42 a	2.75 a	3.96 a	6.49 a
9	12	1.34 a	2.4 a	4.66 a	6.52 a	10.49 a	1.73 a	3.09 a	6.17 a	8.72 a	14.3 a	1.06 a*	1.81 a	3.06 a	4.26 a	6.77 a
	16	0.96 a	2.05 a	4.32 a	6.19 a	10.16 a	1.34 a	2.67 a	5.74 a	8.31 a	13.89 a	0.83 a*	1.58 a	2.88 a	4.08 a	6.6 a
	24	0.24 a	1.36 a	3.66 a	5.53 a	9.5 a	0.58 a	1.85 a	4.9 a	7.52 a	13.07 a	0.36 a*	1.13 a	2.51 a	3.73 a	6.26 a
10	12	1.06 a	2.13 a	4.38 a	6.24 a	10.2 a	1.42 a	2.73 a	5.71 a	8.23 a	13.69 a	0.89 a*	1.64 a	2.93 a	4.13 a	6.65 a
	16	0.61 a	1.7 a	3.96 a	5.82 a	9.78 a	0.95 a	2.23 a	5.19 a	7.73 a	13.18 a	0.6 a*	1.36 a	2.69 a	3.91 a	6.43 a
	24		0.88 a	3.15 a	5.02 a	8.96 a	0.07 b	1.26 a	4.2 a	6.77 a	12.18 a	0.03 a*	0.81 a	2.24 a	3.47 a	6.01 a
12	12	0.44 b	1.49 a	3.68 a	5.56 a	9.46 a	0.76 a	1.94 a	4.67 a	7.07 a	12.18 a	0.5 a*	1.26 a	2.6 a	3.81 a	6.34 a
	16		0.92 b	3.1 a	4.96 a	8.84 a	0.16 c	1.28 a	3.98 a	6.39 a	11.45 a	0.1 a*	0.86 a	2.27 a	3.49 a	6.03 a
	24			2.03 c	3.84 b	7.66 a		0.06 c	2.7 b	5.12 a	10.08 a		0.1 a	1.62 a	2.86 a	5.41 a
14	12		0.81 c	2.8 b	4.54 a	8.45 a	0.1 c	1.13 b	3.55 a	5.75 a	10.37 a	0.07 b*	0.81 a	2.21 a	3.43 a	5.95 a
	16		0.14 d	2.11 c	3.8 b	7.62 a		0.36 d	2.74 c	4.93 b	9.46 a		0.3 b	1.77 a	2.99 a	5.53 a
	24			0.87 e	2.48 d	6.11 c			1.28 d	3.44 d	7.8 b			0.92 c	2.15 a	4.7 a
16	12		0.17 d	1.93 d	3.45 c	6.85 a		0.38 d	2.48 c	4.43 b	8.46 a		0.33 b	1.77 a	2.98 a	5.49 a
	16			1.18 e	2.64 d	5.92 c			1.6 d	3.53 c	7.44 b			1.22 c	2.42 a	4.94 a
	24				1.22 e	4.28 d			0.08 e	1.94 e	5.64 d			0.18 d	1.37 c	3.87 b

See Combined Axial and Lateral Load Table Notes on page 37.

35 psf Lateral Load

Wall Height (ft)	Spacing (in.) o.c.	800S162-(mils)					800S200-(mils)				
		33 ksi		50 ksi			33 ksi		50 ksi		
		33	43	54	68	97	33	43	54	68	97
8	12	1.81 a*	2.79 a	4.92 a	6.75 a	10.78 a	2.34 a*	3.82 a	7.1 a	9.7 a	15.42 a
	16	1.58 a*	2.58 a	4.73 a	6.56 a	10.59 a	2.1 a*	3.57 a	6.85 a	9.47 a	15.21 a
	24	1.14 a*	2.15 a	4.34 a	6.18 a	10.22 a	1.62 a*	3.07 a	6.36 a	9.02 a	14.78 a
9	12	1.62 a*	2.61 a	4.76 a	6.59 a	10.62 a	2.14 a*	3.61 a	6.89 a	9.5 a	15.23 a
	16	1.34 a*	2.34 a	4.51 a	6.35 a	10.38 a	1.83 a*	3.29 a	6.57 a	9.21 a	14.95 a
	24	0.78 a*	1.8 a	4.01 a	5.86 a	9.9 a	1.23 a*	2.66 a	5.94 a	8.64 a	14.4 a
10	12	1.42 a*	2.41 a	4.57 a	6.4 a	10.43 a	1.91 a*	3.37 a	6.64 a	9.28 a	15.01 a
	16	1.07 a*	2.08 a	4.26 a	6.1 a	10.13 a	1.54 a*	2.97 a	6.25 a	8.91 a	14.66 a
	24	0.4 a*	1.42 a	3.65 a	5.5 a	9.53 a	0.81 a*	2.2 a	5.47 a	8.2 a	13.96 a
12	12	0.95 a*	1.94 a	4.12 a	5.95 a	9.97 a	1.4 a*	2.81 a	6.05 a	8.72 a	14.45 a
	16	0.47 a*	1.47 a	3.67 a	5.51 a	9.53 a	0.88 a*	2.26 a	5.48 a	8.19 a	13.93 a
	24		0.56 a	2.81 a	4.65 a	8.66 a		1.18 a	4.38 a	7.15 a	12.9 a
14	12	0.42 a*	1.4 a	3.58 a	5.4 a	9.39 a	0.81 a*	2.14 a	5.26 a	7.97 a	13.73 a
	16		0.79 a	2.98 a	4.8 a	8.78 a	0.15 b*	1.42 a	4.51 a	7.25 a	13 a
	24			1.85 b	3.66 a	7.59 a		0.08 b	3.1 a	5.88 a	11.58 a
16	12		0.81 b	2.96 a	4.75 a	8.69 a	0.19 b*	1.41 a	4.3 a	6.91 a	12.5 a
	16		0.07 c	2.22 b	3.99 a	7.88 a		0.55 b	3.4 a	6.02 a	11.56 a
	24			0.84 d	2.57 c	6.36 a			1.75 c	4.37 b	9.79 a

See Combined Axial and Lateral Load Table Notes on page 37.

Combined Axial and Lateral Load Tables

SFIA
STEEL FRAMING INDUSTRY ASSOCIATION

40 psf Lateral Load

Wall Height (ft)	Spacing (in.) o.c.	350S162-(mils)					362S137-(mils)				362S162-(mils)				
		33 ksi		50 ksi			33 ksi		50 ksi		33 ksi		50 ksi		
		33	43	54	68	97	33	43	54	68	33	43	54	68	97
8	12	0.43 c	1.11 b	2.64 a	3.72 a	5.93 a	0.24 c	0.81 b	2.11 a	3.1 a	0.5 b	1.21 a	2.82 a	4.01 a	6.35 a
	16		0.65 c	2.19 b	3.26 a	5.41 a		0.38 c	1.71 b	2.67 a	0.06 d	0.75 c	2.37 b	3.54 a	5.83 a
	24			1.39 d	2.42 c	4.45 a			0.97 d	1.88 c			1.56 d	2.68 c	4.85 a
9	12	0.07 d	0.69 c	2.08 b	3.06 a	5.02 a		0.44 d	1.66 c	2.55 b	0.13 d	0.78 c	2.27 b	3.34 a	5.44 a
	16		0.17 d	1.6 d	2.55 c	4.44 a			1.21 d	2.07 c		0.26 d	1.77 c	2.82 b	4.84 a
	24			0.72 e	1.63 d	3.38 c			0.39 e	1.19 e			0.87 e	1.86 d	3.75 c
10	12		0.29 d	1.56 d	2.43 c	4.13 a		0.09 e	1.22 d	2.01 c		0.38 d	1.74 c	2.69 b	4.53 a
	16			1.05 e	1.89 d	3.51 c			0.74 e	1.49 d			1.21 d	2.12 d	3.89 b
	24			0.15 f	0.93 e	2.4 d				0.57 e			0.27 e	1.12 e	2.73 d
12	12			0.71 e	1.35 e	2.58 d			0.48 e	1.06 e			0.84 e	1.55 e	2.9 d
	16			0.2 f	0.81 e	1.96 e				0.53 f			0.3 f	0.98 e	2.24 e
	24					0.87 f									1.1 f
14	12			0.13 f	0.6 f	1.49 e				0.39 f			0.2 f	0.73 f	1.71 e
	16				0.09 f	0.9 f								0.19 f	1.09 f
	24														0.02 f
16	12				0.11 f	0.75 f								0.19 f	0.9 f
	16					0.21 f									0.33 f
	24														

40 psf Lateral Load

Wall Height (ft)	Spacing (in.) o.c.	362S200-(mils)					400S137-(mils)				400S162-(mils)				
		33 ksi		50 ksi			33 ksi		50 ksi		33 ksi		50 ksi		
		33	43	54	68	97	33	43	54	68	33	43	54	68	97
8	12	0.74 b	1.71 a	3.65 a	5.18 a	7.97 a	0.4 b	1.04 a	2.5 a	3.72 a	0.7 a	1.5 a	3.32 a	4.81 a	7.58 a
	16	0.25 c	1.2 b	3.14 a	4.67 a	7.43 a		0.61 b	2.1 a	3.29 a	0.26 c	1.03 a	2.87 a	4.33 a	7.06 a
	24		0.26 d	2.19 c	3.72 b	6.41 a			1.34 c	2.47 b		0.17 c	2.04 b	3.44 a	6.06 a
9	12	0.32 c	1.21 b	2.97 a	4.37 a	6.91 a	0.07 d	0.67 c	2.06 a	3.21 a	0.33 c	1.07 b	2.78 a	4.16 a	6.7 a
	16		0.64 c	2.4 c	3.79 a	6.28 a		0.18 d	1.59 c	2.7 b		0.53 c	2.26 b	3.6 a	6.07 a
	24			1.36 d	2.74 c	5.12 b			0.74 d	1.75 d			1.32 d	2.57 c	4.92 b
10	12		0.74 d	2.32 c	3.58 b	5.84 a		0.3 d	1.61 c	2.65 b		0.64 c	2.24 b	3.48 a	5.76 a
	16		0.13 e	1.71 d	2.95 c	5.15 a			1.09 d	2.07 c		0.06 d	1.67 d	2.86 c	5.06 a
	24			0.64 e	1.85 e	3.92 c			0.17 e	1.05 e			0.66 e	1.75 d	3.8 c
12	12			1.21 e	2.19 d	3.9 c			0.79 e	1.58 d			1.25 e	2.2 d	3.96 c
	16			0.6 e	1.55 e	3.19 d			0.23 f	0.96 e			0.64 e	1.54 e	3.21 d
	24				0.45 f	1.95 e								0.38 f	1.89 e
14	12			0.43 f	1.18 e	2.45 e			0.15 f	0.73 f			0.48 f	1.18 e	2.49 d
	16				0.58 f	1.78 e				0.14 f				0.54 f	1.76 e
	24					0.62 f									0.51 f
16	12				0.5 f	1.46 f				0.15 f				0.48 f	1.45 e
	16					0.83 f									0.77 f
	24														

See Combined Axial and Lateral Load Table Notes on page 37.

Combined Axial and Lateral Load Tables

SFIA
STEEL FRAMING INDUSTRY ASSOCIATION

40 psf Lateral Load

Wall Height (ft)	Spacing (in.) o.c.	400S200-(mils)					550S162-(mils)					600S137-(mils)				
		33 ksi		50 ksi			33 ksi		50 ksi			33 ksi		50 ksi		
		33	43	54	68	97	33	43	54	68	97	33	43	54	68	97
8	12	0.97 a	2.06 a	4.28 a	6.14 a	9.48 a	1.35 a	2.41 a	4.7 a	6.55 a	10.42 a	0.97 a	1.73 a	3.15 a	4.4 a	7 a
	16	0.49 b	1.55 a	3.76 a	5.62 a	8.93 a	0.98 a	2.06 a	4.36 a	6.22 a	10.09 a	0.68 a	1.44 a	2.9 a	4.16 a	6.79 a
	24		0.61 c	2.8 b	4.64 a	7.88 a	0.26 a	1.37 a	3.7 a	5.56 a	9.42 a	0.11 a	0.88 a	2.42 a	3.68 a	6.38 a
9	12	0.55 b	1.56 a	3.61 a	5.36 a	8.43 a	1.03 a	2.09 a	4.36 a	6.23 a	10.09 a	0.73 a	1.48 a	2.93 a	4.19 a	6.81 a
	16		0.97 b	3.01 a	4.74 a	7.77 a	0.57 a	1.65 a	3.93 a	5.81 a	9.66 a	0.37 a	1.13 a	2.62 a	3.88 a	6.54 a
	24			1.93 c	3.62 b	6.55 a		0.82 a	3.11 a	4.98 a	8.8 a		0.43 a	2.01 a	3.27 a	6.01 a
10	12	0.15 d	1.07 c	2.94 a	4.54 a	7.33 a	0.69 a	1.74 a	3.94 a	5.85 a	9.7 a	0.47 a	1.22 a	2.69 a	3.94 a	6.59 a
	16		0.43 d	2.29 c	3.86 b	6.59 a	0.16 b	1.22 a	3.43 a	5.33 a	9.15 a	0.04 b	0.79 a	2.31 a	3.56 a	6.25 a
	24			1.13 d	2.64 d	5.25 b		0.26 c	2.46 b	4.32 a	8.09 a			1.57 b	2.82 a	5.59 a
12	12		0.2 e	1.73 d	3.01 c	5.21 b		0.99 b	3.01 a	4.77 a	8.67 a		0.63 b	2.13 a	3.36 a	6.05 a
	16			1.03 e	2.27 d	4.4 c		0.34 d	2.35 c	4.07 b	7.88 a		0.06 c	1.6 b	2.82 a	5.55 a
	24				1 e	2.97 e			1.16 d	2.8 d	6.43 b			0.63 d	1.82 c	4.62 b
14	12			0.79 e	1.76 e	3.44 d		0.26 d	2.05 d	3.59 c	6.96 a		0.01 d	1.5 c	2.68 b	5.36 a
	16			0.12 f	1.06 e	2.65 e			1.31 e	2.79 d	6.03 c			0.85 d	2 d	4.71 b
	24					1.29 f				1.38 e	4.39 d				0.77 e	3.5 d
16	12			0.14 f	0.89 f	2.17 e			1.19 e	2.48 d	5.29 c			0.85 e	1.95 d	4.57 c
	16				0.24 f	1.43 f			0.42 f	1.65 e	4.31 d			0.11 e	1.16 e	3.77 d
	24					0.17 f				0.2 f	2.62 e					2.35 e

40 psf Lateral Load

Wall Height (ft)	Spacing (in.) o.c.	600S162-(mils)					600S200-(mils)					800S137-(mils)				
		33 ksi		50 ksi			33 ksi		50 ksi			33 ksi		50 ksi		
		33	43	54	68	97	33	43	54	68	97	33	43	54	68	97
8	12	1.47 a	2.53 a	4.79 a	6.65 a	10.62 a	1.88 a	3.27 a	6.42 a	9 a	14.67 a	1.14 a*	1.88 a	3.12 a	4.32 a	6.83 a
	16	1.12 a	2.2 a	4.48 a	6.35 a	10.33 a	1.52 a	2.88 a	6.03 a	8.63 a	14.3 a	0.92 a*	1.67 a	2.96 a	4.16 a	6.68 a
	24	0.45 a	1.58 a	3.89 a	5.77 a	9.75 a	0.81 a	2.13 a	5.27 a	7.92 a	13.58 a	0.5 a*	1.26 a	2.62 a	3.84 a	6.37 a
9	12	1.18 a	2.25 a	4.52 a	6.38 a	10.35 a	1.56 a	2.91 a	5.98 a	8.54 a	14.12 a	0.96 a*	1.71 a	2.98 a	4.19 a	6.7 a
	16	0.75 a	1.85 a	4.13 a	6 a	9.97 a	1.12 a	2.43 a	5.49 a	8.08 a	13.65 a	0.69 a*	1.45 a	2.77 a	3.98 a	6.51 a
	24		1.07 a	3.38 a	5.26 a	9.22 a	0.27 a	1.51 a	4.55 a	7.18 a	12.73 a	0.16 a*	0.94 a	2.35 a	3.58 a	6.12 a
10	12	0.86 a	1.94 a	4.2 a	6.06 a	10.02 a	1.22 a	2.51 a	5.49 a	8.02 a	13.47 a	0.77 a*	1.52 a	2.83 a	4.03 a	6.55 a
	16	0.36 a	1.46 a	3.73 a	5.59 a	9.54 a	0.69 a	1.94 a	4.9 a	7.45 a	12.89 a	0.44 a*	1.2 a	2.56 a	3.78 a	6.31 a
	24		0.54 b	2.82 a	4.68 a	8.61 a		0.86 a	3.78 a	6.37 a	11.76 a		0.58 a	2.04 a	3.28 a	5.83 a
12	12	0.19 c	1.24 a	3.43 a	5.3 a	9.19 a	0.5 b	1.66 a	4.37 a	6.77 a	11.86 a	0.33 a*	1.09 a	2.46 a	3.67 a	6.2 a
	16		0.61 c	2.78 b	4.63 a	8.49 a		0.92 b	3.6 a	6.01 a	11.05 a		0.64 a	2.08 a	3.31 a	5.85 a
	24			1.59 d	3.39 c	7.17 a			2.19 c	4.6 b	9.52 a			1.35 a	2.59 a	5.15 a
14	12		0.52 d	2.5 c	4.21 a	8.09 a		0.79 c	3.19 b	5.39 a	9.97 a		0.59 a	2.02 a	3.24 a	5.77 a
	16			1.74 d	3.41 c	7.17 a			2.3 c	4.48 b	8.96 a		0.02 b	1.52 a	2.75 a	5.29 a
	24			0.38 e	1.95 d	5.51 c			0.71 e	2.85 d	7.15 c			0.57 c	1.8 b	4.35 a
16	12			1.6 d	3.09 c	6.44 b		0.01 d	2.09 d	4.03 c	8.01 a		0.06 c	1.53 b	2.74 a	5.25 a
	16			0.78 e	2.21 d	5.43 c			1.14 e	3.05 d	6.9 c			0.91 c	2.11 b	4.63 a
	24				0.67 e	3.65 e				1.32 e	4.94 d				0.95 d	3.44 c

See Combined Axial and Lateral Load Table Notes on page 37.

40 psf Lateral Load

Wall Height (ft)	Spacing (in.) o.c.	800S162-(mils)					800S200-(mils)				
		33 ksi		50 ksi			33 ksi		50 ksi		
		33	43	54	68	97	33	43	54	68	97
8	12	1.71 a*	2.7 a	4.84 a	6.67 a	10.7 a	2.23 a*	3.71 a	6.99 a	9.6 a	15.33 a
	16	1.46 a*	2.45 a	4.62 a	6.45 a	10.49 a	1.96 a*	3.42 a	6.71 a	9.34 a	15.08 a
	24	0.95 a*	1.97 a	4.17 a	6.02 a	10.06 a	1.42 a*	2.85 a	6.15 a	8.83 a	14.59 a
9	12	1.5 a*	2.5 a	4.65 a	6.49 a	10.51 a	2.01 a*	3.47 a	6.75 a	9.38 a	15.11 a
	16	1.18 a*	2.19 a	4.37 a	6.21 a	10.24 a	1.66 a*	3.11 a	6.39 a	9.05 a	14.79 a
	24	0.55 a*	1.57 a	3.8 a	5.66 a	9.69 a	0.98 a*	2.39 a	5.68 a	8.39 a	14.16 a
10	12	1.27 a*	2.27 a	4.44 a	6.27 a	10.3 a	1.75 a*	3.2 a	6.47 a	9.12 a	14.86 a
	16	0.88 a*	1.89 a	4.08 a	5.93 a	9.96 a	1.33 a*	2.75 a	6.02 a	8.71 a	14.46 a
	24	0.11 a*	1.14 a	3.39 a	5.24 a	9.28 a	0.51 a*	1.88 a	5.14 a	7.89 a	13.67 a
12	12	0.74 a*	1.74 a	3.93 a	5.76 a	9.78 a	1.17 a*	2.57 a	5.81 a	8.49 a	14.23 a
	16	0.2 a*	1.21 a	3.42 a	5.26 a	9.28 a	0.59 a*	1.94 a	5.16 a	7.89 a	13.63 a
	24		0.18 a	2.45 a	4.29 a	8.29 a		0.74 a	3.92 a	6.72 a	12.47 a
14	12	0.15 b*	1.14 a	3.32 a	5.14 a	9.13 a	0.52 a*	1.83 a	4.94 a	7.66 a	13.41 a
	16		0.45 b	2.65 a	4.47 a	8.43 a		1.03 a	4.1 a	6.85 a	12.58 a
	24			1.39 c	3.19 a	7.1 a			2.52 b	5.31 a	11 a
16	12		0.49 b	2.63 a	4.42 a	8.34 a		1.03 a	3.91 a	6.52 a	12.09 a
	16			1.81 c	3.57 a	7.44 a		0.09 c	2.91 b	5.53 a	11.04 a
	24			0.29 d	2 c	5.75 b			1.09 d	3.71 c	9.08 a

See Combined Axial and Lateral Load Table Notes on page 37.

Combined Axial and Lateral Load Tables

SFIA
STEEL FRAMING INDUSTRY ASSOCIATION

50 psf Lateral Load

Wall Height (ft)	Spacing (in.) o.c.	350S162-(mils)					362S137-(mils)				362S162-(mils)				
		33 ksi		50 ksi			33 ksi		50 ksi		33 ksi		50 ksi		
		33	43	54	68	97	33	43	54	68	33	43	54	68	97
8	12	0.09 d	0.76 c	2.3 b	3.38 a	5.54 a		0.49 c	1.81 b	2.78 a	0.16 c	0.86 b	2.48 a	3.66 a	5.96 a
	16		0.21 d	1.78 c	2.83 b	4.92 a			1.33 c	2.27 b		0.31 d	1.96 c	3.1 b	5.33 a
	24			0.83 e	1.84 d	3.78 c			0.46 e	1.33 d			0.99 d	2.08 d	4.17 b
9	12		0.29 d	1.71 c	2.68 b	4.58 a		0.07 d	1.32 d	2.18 c		0.39 d	1.89 c	2.94 b	4.99 a
	16			1.14 d	2.08 d	3.89 b			0.78 e	1.61 d			1.31 d	2.32 c	4.28 b
	24			0.14 e	1 e	2.65 d				0.59 e			0.27 e	1.21 e	3.01 d
10	12			1.17 d	2.02 d	3.66 c			0.85 e	1.61 d			1.34 d	2.26 c	4.04 b
	16			0.58 e	1.39 e	2.93 d			0.29 e	1.01 e			0.72 e	1.61 d	3.29 c
	24				0.29 f	1.66 e								0.45 e	1.96 e
12	12			0.32 f	0.94 e	2.11 e			0.1 f	0.66 e			0.43 f	1.11 e	2.4 d
	16				0.32 f	1.39 e				0.06 f				0.46 f	1.65 e
	24					0.16 f									0.34 f
14	12				0.21 f	1.04 f				0.01 f				0.32 f	1.24 f
	16					0.37 f									0.53 f
	24														
16	12					0.34 f									0.47 f
	16														
	24														

50 psf Lateral Load

Wall Height (ft)	Spacing (in.) o.c.	362S200-(mils)					400S137-(mils)				400S162-(mils)				
		33 ksi		50 ksi			33 ksi		50 ksi		33 ksi		50 ksi		
		33	43	54	68	97	33	43	54	68	33	43	54	68	97
8	12	0.37 c	1.33 a	3.26 a	4.79 a	7.56 a	0.1 c	0.72 b	2.19 a	3.39 a	0.37 b	1.15 a	2.98 a	4.45 a	7.19 a
	16		0.72 c	2.65 b	4.18 a	6.91 a		0.21 c	1.71 b	2.87 a		0.59 c	2.45 a	3.87 a	6.55 a
	24			1.54 d	3.06 c	5.69 a			0.82 d	1.9 c			1.46 c	2.81 c	5.35 a
9	12		0.78 c	2.54 b	3.93 a	6.43 a		0.29 d	1.7 c	2.82 b		0.66 c	2.39 b	3.73 a	6.22 a
	16		0.1 d	1.86 d	3.25 c	5.68 a			1.15 d	2.21 c		0.04 d	1.78 c	3.07 b	5.48 a
	24			0.67 e	2.02 d	4.33 c			0.15 e	1.11 e			0.68 e	1.87 d	4.12 c
10	12		0.27 d	1.86 d	3.1 c	5.32 a			1.22 d	2.21 c		0.2 d	1.81 c	3.01 b	5.23 a
	16			1.15 e	2.38 d	4.52 c			0.62 e	1.55 d			1.15 d	2.29 d	4.41 b
	24				1.11 e	3.09 d				0.37 e				1 e	2.95 d
12	12			0.74 e	1.7 e	3.36 d			0.37 e	1.11 e			0.78 e	1.69 e	3.39 d
	16			0.05 f	0.98 e	2.55 e				0.41 f			0.09 f	0.93 e	2.52 e
	24					1.13 f									1.01 f
14	12				0.72 f	1.94 e				0.28 f			0.03 f	0.7 f	1.94 e
	16				0.05 f	1.17 f									1.11 f
	24														
16	12				0.08 f	0.98 f								0.02 f	0.94 f
	16					0.27 f									0.17 f
	24														

See Combined Axial and Lateral Load Table Notes on page 37.

Combined Axial and Lateral Load Tables

SFIA
STEEL FRAMING INDUSTRY ASSOCIATION

50 psf Lateral Load

Wall Height (ft)	Spacing (in.) o.c.	400S200-(mils)					550S162-(mils)					600S137-(mils)				
		33 ksi		50 ksi			33 ksi		50 ksi			33 ksi		50 ksi		
		33	43	54	68	97	33	43	54	68	97	33	43	54	68	97
8	12	0.6 b	1.67 a	3.89 a	5.75 a	9.06 a	1.07 a	2.14 a	4.44 a	6.3 a	10.17 a	0.75 a	1.51 a	2.96 a	4.22 a	6.85 a
	16	0.03 c	1.07 b	3.27 a	5.12 a	8.39 a	0.61 a	1.71 a	4.02 a	5.89 a	9.75 a	0.39 a	1.16 a	2.66 a	3.92 a	6.58 a
	24			2.13 c	3.95 b	7.14 a		0.88 a	3.21 a	5.08 a	8.93 a		0.47 a	2.06 a	3.33 a	6.07 a
9	12	0.14 c	1.12 b	3.16 a	4.89 a	7.93 a	0.69 a	1.76 a	4.04 a	5.91 a	9.76 a	0.46 a	1.21 a	2.7 a	3.96 a	6.61 a
	16		0.43 c	2.46 c	4.17 a	7.15 a	0.14 b	1.23 a	3.52 a	5.39 a	9.23 a	0.02 b	0.78 a	2.31 a	3.57 a	6.28 a
	24			1.19 d	2.84 c	5.7 b		0.23 c	2.52 b	4.38 a	8.19 a			1.57 a	2.83 a	5.62 a
10	12		0.59 d	2.45 c	4.03 b	6.77 a	0.29 b	1.35 a	3.56 a	5.46 a	9.28 a	0.14 b	0.89 a	2.4 a	3.65 a	6.34 a
	16			1.69 d	3.23 c	5.9 a		0.73 b	2.94 a	4.82 a	8.61 a		0.37 b	1.94 a	3.19 a	5.92 a
	24			0.35 e	1.82 e	4.33 c			1.78 c	3.61 b	7.34 a			1.04 c	2.29 b	5.11 a
12	12			1.2 e	2.45 d	4.59 c		0.5 c	2.51 b	4.24 a	8.07 a		0.2 c	1.73 b	2.96 a	5.68 a
	16			0.41 e	1.61 e	3.66 d			1.74 d	3.42 c	7.13 a			1.1 c	2.31 b	5.08 a
	24				0.16 f	2.03 e			0.35 e	1.93 d	5.43 c				1.12 d	3.95 c
14	12			0.28 f	1.23 e	2.84 e			1.49 d	2.98 d	6.26 b			1 d	2.17 c	4.87 b
	16				0.43 f	1.94 e			0.63 e	2.06 e	5.18 d			0.24 e	1.37 d	4.09 c
	24					0.4 f				0.44 f	3.29 e					2.67 e
16	12				0.39 f	1.6 f			0.6 e	1.85 e	4.55 d			0.28 e	1.35 e	3.96 d
	16					0.77 f				0.89 f	3.43 e				0.44 e	3.03 e
	24										1.52 f					1.39 f

50 psf Lateral Load

Wall Height (ft)	Spacing (in.) o.c.	600S162-(mils)					600S200-(mils)					800S137-(mils)				
		33 ksi		50 ksi			33 ksi		50 ksi			33 ksi		50 ksi		
		33	43	54	68	97	33	43	54	68	97	33	43	54	68	97
8	12	1.21 a	2.28 a	4.56 a	6.43 a	10.4 a	1.6 a	2.98 a	6.12 a	8.72 a	14.4 a	0.98 a*	1.72 a	3 a	4.2 a	6.72 a
	16	0.78 a	1.89 a	4.18 a	6.06 a	10.04 a	1.16 a	2.5 a	5.64 a	8.27 a	13.94 a	0.71 a*	1.47 a	2.79 a	4 a	6.53 a
	24		1.12 a	3.45 a	5.34 a	9.32 a	0.3 a	1.58 a	4.71 a	7.39 a	13.05 a	0.18 a*	0.96 a	2.37 a	3.6 a	6.15 a
9	12	0.86 a	1.95 a	4.22 a	6.09 a	10.06 a	1.23 a	2.55 a	5.62 a	8.19 a	13.77 a	0.76 a*	1.51 a	2.82 a	4.03 a	6.55 a
	16	0.34 a	1.46 a	3.75 a	5.62 a	9.59 a	0.69 a	1.97 a	5.02 a	7.63 a	13.19 a	0.43 a*	1.19 a	2.56 a	3.78 a	6.31 a
	24		0.52 b	2.84 a	4.72 a	8.68 a		0.85 a	3.87 a	6.53 a	12.06 a		0.56 a	2.04 a	3.27 a	5.83 a
10	12	0.48 a	1.58 a	3.84 a	5.71 a	9.66 a	0.82 a	2.08 a	5.05 a	7.59 a	13.03 a	0.52 a*	1.28 a	2.63 a	3.84 a	6.37 a
	16		0.99 a	3.27 a	5.13 a	9.07 a	0.19 b	1.39 a	4.33 a	6.9 a	12.32 a	0.11 a*	0.89 a	2.3 a	3.53 a	6.07 a
	24			2.17 b	4.03 a	7.94 a		0.1 b	2.99 a	5.59 a	10.94 a		0.12 a	1.66 a	2.91 a	5.48 a
12	12		0.76 b	2.94 a	4.79 a	8.66 a		1.1 b	3.79 a	6.2 a	11.25 a		0.75 a	2.17 a	3.4 a	5.94 a
	16		0.01 d	2.17 c	4 b	7.82 a		0.23 c	2.88 b	5.29 a	10.27 a		0.21 a	1.71 a	2.95 a	5.5 a
	24			0.77 d	2.53 d	6.25 b			1.22 d	3.62 c	8.45 a			0.82 b	2.07 a	4.64 a
14	12			1.92 d	3.6 c	7.39 a		0.15 d	2.52 c	4.7 b	9.21 a		0.16 b	1.65 a	2.87 a	5.41 a
	16			1.03 e	2.66 d	6.32 c			1.48 d	3.64 c	8.03 b			1.04 b	2.27 a	4.81 a
	24				0.97 e	4.39 d				1.75 e	5.91 d				1.12 c	3.67 b
16	12			0.98 e	2.42 d	5.67 c			1.37 d	3.28 d	7.16 b			1.06 c	2.27 b	4.78 a
	16			0.04 f	1.41 e	4.5 d			0.28 e	2.15 e	5.88 d			0.32 d	1.52 c	4.02 b
	24					2.47 e				0.18 f	3.64 e				0.12 e	2.59 d

See Combined Axial and Lateral Load Table Notes on page 37.

Combined Axial and Lateral Load Tables

SFIA
STEEL FRAMING INDUSTRY ASSOCIATION

50 psf Lateral Load

Wall Height (ft)	Spacing (in.) o.c.	800S162-(mils)					800S200-(mils)				
		33 ksi		50 ksi			33 ksi		50 ksi		
		33	43	54	68	97	33	43	54	68	97
8	12	1.52 a*	2.52 a	4.67 a	6.51 a	10.54 a	2.03 a*	3.49 a	6.78 a	9.41 a	15.14 a
	16	1.2 a*	2.21 a	4.39 a	6.24 a	10.27 a	1.69 a*	3.14 a	6.43 a	9.09 a	14.84 a
	24	0.58 a*	1.61 a	3.84 a	5.7 a	9.74 a	1.01 a*	2.43 a	5.73 a	8.45 a	14.22 a
9	12	1.26 a*	2.26 a	4.44 a	6.28 a	10.31 a	1.75 a*	3.2 a	6.48 a	9.13 a	14.87 a
	16	0.86 a*	1.88 a	4.08 a	5.93 a	9.97 a	1.32 a*	2.75 a	6.03 a	8.72 a	14.48 a
	24	0.09 a*	1.12 a	3.39 a	5.25 a	9.29 a	0.48 a*	1.86 a	5.15 a	7.9 a	13.69 a
10	12	0.97 a*	1.98 a	4.17 a	6.01 a	10.04 a	1.43 a*	2.86 a	6.13 a	8.81 a	14.56 a
	16	0.49 a*	1.51 a	3.73 a	5.58 a	9.62 a	0.91 a*	2.31 a	5.58 a	8.3 a	14.06 a
	24		0.59 a	2.88 a	4.74 a	8.77 a		1.24 a	4.5 a	7.29 a	13.08 a
12	12	0.33 a*	1.34 a	3.55 a	5.39 a	9.4 a	0.73 a*	2.1 a	5.32 a	8.04 a	13.78 a
	16		0.69 a	2.93 a	4.77 a	8.78 a	0.02 a*	1.33 a	4.53 a	7.3 a	13.05 a
	24			1.74 a	3.58 a	7.56 a			3.03 a	5.87 a	11.62 a
14	12		0.62 a	2.82 a	4.64 a	8.6 a		1.22 a	4.3 a	7.05 a	12.79 a
	16			2.01 b	3.82 a	7.76 a		0.26 b	3.29 a	6.07 a	11.78 a
	24			0.5 d	2.27 c	6.14 a			1.42 c	4.22 b	9.86 a
16	12			2.01 b	3.78 a	7.66 a		0.32 c	3.15 a	5.77 a	11.3 a
	16			1.03 d	2.77 c	6.57 a			1.97 c	4.6 b	10.04 a
	24				0.91 d	4.57 c				2.45 d	7.71 b

See Combined Axial and Lateral Load Table Notes on page 37.

Allowable Floor Joist Span Table Notes

1. Spans are based on continuous support of compression flange over the full length of the joist.
2. End shear and web crippling capacity have not been reduced for punchouts.
3. Calculated allowable properties are based on AISI S100-12, "North American Specification for Design of Cold-Formed Steel Structural Members."
4. For two equal spans, the listed span is the center-to-center distance from either end to the center support, with the joist continuous over the center support.
5. Joists must be braced against rotation at all supports.
6. End web crippling check is based on 3.5 inch end bearing. Joist flanges must be fastened to the support.
7. Shear capacity at mid-span support has been reduced for the presence of punchouts adjacent to the support. Mid-span combined bending and shear check based on stiffened web.
8. Deflection checks are computed using unbalanced loads for the two equal span condition.
9. Total load deflection limited to L/240. Live load deflection limit as noted.
10. " e " indicates that web stiffeners are required at the end supports only.
11. " i " indicates that web stiffeners are required at the interior supports only.
12. " a " indicates that web stiffeners are required at all the supports.
13. Allowable flexural strength values in the tables are based on the minimum of local, distortional, and lateral-torsional buckling. Distortional buckling strength is based on a $k\varphi = 0$. Higher values may be obtained when sheathing is applied to the walls resulting in a higher k-phi value.

Floor Joist Span Tables

SFIA
STEEL FRAMING INDUSTRY ASSOCIATION

10 psf Dead Load and 20 psf Live Load

		Live Load Deflection L/360						Live Load Deflection L/480					
		Single Span			Two Equal Spans			Single Span			Two Equal Spans		
		Spacing (in) o.c.			Spacing (in) o.c.			Spacing (in) o.c.			Spacing (in) o.c.		
Member	Fy (ksi)	12	16	24	12	16	24	12	16	24	12	16	24
600S162-33	33	14' 6"	12' 7" e	10' 3" e	14' 6" i	12' 7" i	10' 3" a	14' 4"	12' 7" e	10' 3" e	14' 6" i	12' 7" i	10' 3" a
600S200-33	33	15' 6"	13' 5" e	10' 11" e	15' 6" i	13' 5" i	10' 11" a	15' 0"	13' 5" e	10' 11" e	15' 6" i	13' 5" i	10' 11" a
600S162-43	33	17' 2"	15' 6"	12' 8"	17' 11" i	15' 6" i	12' 8" i	15' 7"	14' 2"	12' 5"	17' 6" i	15' 6" i	12' 8" i
600S200-43	33	18' 0"	16' 0"	13' 1"	18' 6" i	16' 0" i	13' 1" i	16' 5"	14' 11"	13' 0"	18' 5" i	16' 0" i	13' 1" i
600S250-43	33	18' 11"	16' 5"	13' 5" e	19' 0" i	16' 5" i	13' 5" i	17' 2"	15' 7"	13' 5" e	19' 0" i	16' 5" i	13' 5" i
600S162-54	50	18' 5"	16' 9"	14' 7"	20' 8"	18' 9" i	16' 5" i	16' 9"	15' 2"	13' 3"	18' 9"	17' 1"	14' 11" i
600S200-54	50	19' 4"	17' 7"	15' 4"	21' 9"	19' 9" i	17' 3" i	17' 7"	16' 0"	14' 0"	19' 9"	17' 11"	15' 8" i
600S250-54	50	20' 2"	18' 4"	16' 0"	22' 8"	20' 7" i	17' 10" i	18' 4"	16' 8"	14' 7"	20' 7"	18' 9"	16' 4" i
600S162-68	50	19' 9"	17' 11"	15' 8"	22' 2"	20' 2"	17' 7"	17' 11"	16' 4"	14' 3"	20' 2"	18' 4"	16' 0"
600S200-68	50	20' 9"	18' 10"	16' 6"	23' 4"	21' 2"	18' 6"	18' 10"	17' 2"	15' 0"	21' 2"	19' 3"	16' 10"
600S250-68	50	21' 9"	19' 9"	17' 3"	24' 5"	22' 3"	19' 5" i	19' 9"	18' 0"	15' 8"	22' 3"	20' 2"	17' 8"
600S162-97	50	21' 11"	19' 11"	17' 4"	24' 7"	22' 4"	19' 6"	19' 11"	18' 1"	15' 9"	22' 4"	20' 3"	17' 9"
600S200-97	50	23' 1"	20' 11"	18' 4"	25' 11"	23' 6"	20' 7"	20' 11"	19' 0"	16' 8"	23' 6"	21' 4"	18' 8"
600S250-97	50	24' 3"	22' 0"	19' 3"	27' 2"	24' 8"	21' 7"	22' 0"	20' 0"	17' 6"	24' 8"	22' 5"	19' 7"
600S162-118	50	23' 1"	21' 0"	18' 4"	25' 11"	23' 7"	20' 7"	21' 0"	19' 1"	16' 8"	23' 7"	21' 5"	18' 9"
600S200-118	50	24' 5"	22' 2"	19' 4"	27' 5"	24' 11"	21' 9"	22' 2"	20' 2"	17' 7"	24' 11"	22' 7"	19' 9"
600S250-118	50	25' 8"	23' 4"	20' 4"	28' 9"	26' 2"	22' 10"	23' 4"	21' 2"	18' 6"	26' 2"	23' 9"	20' 9"
800S162-33	33	16' 9" e	14' 6" e	11' 10" e	16' 9" a	14' 0" a	10' 6" a	16' 9" e	14' 6" e	11' 10" e	16' 9" a	14' 0" a	10' 6" a
800S200-33	33	18' 0" e	15' 7" e	12' 8" e	17' 10" a	14' 7" a	10' 10" a	18' 0" e	15' 7" e	12' 8" e	17' 10" a	14' 7" a	10' 10" a
800S162-43	33	20' 2"	17' 6"	14' 3" e	20' 2" i	17' 6" i	14' 3" i	19' 6"	17' 6"	14' 3" e	20' 2" i	17' 6" i	14' 3" i
800S200-43	33	21' 7"	18' 8"	15' 3" e	21' 7" i	18' 8" i	15' 3" a	20' 7"	18' 8"	15' 3" e	21' 7" i	18' 8" i	15' 3" a
800S250-43	33	22' 2"	19' 2" e	15' 8" e	22' 2" i	19' 2" i	15' 8" a	21' 5"	19' 2" e	15' 8" e	22' 2" i	19' 2" i	15' 8" a
800S162-54	50	23' 1"	20' 11"	18' 3"	25' 10" i	23' 5" i	19' 1" i	20' 11"	19' 0"	16' 7"	23' 6"	21' 4" i	18' 8" i
800S200-54	50	24' 4"	22' 1"	19' 4"	27' 3" i	24' 10" i	20' 5" i	22' 1"	20' 1"	17' 6"	24' 10"	22' 6" i	19' 8" i
800S250-54	50	25' 3"	22' 11"	20' 1"	28' 4" i	25' 7" i	20' 10" i	22' 11"	20' 10"	18' 3"	25' 9"	23' 5" i	20' 5" i
800S162-68	50	24' 11"	22' 8"	19' 9"	28' 0"	25' 5" i	22' 2" i	22' 8"	20' 7"	18' 0"	25' 5"	23' 1"	20' 2" i
800S200-68	50	26' 1"	23' 9"	20' 9"	29' 4"	26' 8"	23' 3" i	23' 9"	21' 7"	18' 10"	26' 8"	24' 2"	21' 2"
800S250-68	50	27' 3"	24' 9"	21' 7"	30' 7"	27' 9" i	24' 3" i	24' 9"	22' 6"	19' 8"	27' 9"	25' 3"	22' 1" i
800S162-97	50	27' 8"	25' 2"	22' 0"	31' 1"	28' 3"	24' 8"	25' 2"	22' 10"	20' 0"	28' 3"	25' 8"	22' 5"
800S200-97	50	29' 0"	26' 5"	23' 1"	32' 7"	29' 7"	25' 11"	26' 5"	24' 0"	20' 11"	29' 7"	26' 11"	23' 6"
800S250-97	50	30' 4"	27' 7"	24' 1"	34' 1"	30' 11"	27' 1"	27' 7"	25' 1"	21' 11"	30' 11"	28' 2"	24' 7"
800S162-118	50	29' 4"	26' 7"	23' 3"	32' 11"	29' 11"	26' 1"	26' 7"	24' 2"	21' 2"	29' 11"	27' 2"	23' 9"
800S200-118	50	30' 9"	27' 11"	24' 5"	34' 6"	31' 5"	27' 5"	27' 11"	25' 5"	22' 2"	31' 5"	28' 6"	24' 11"
800S250-118	50	32' 2"	29' 3"	25' 6"	36' 1"	32' 10"	28' 8"	29' 3"	26' 7"	23' 2"	32' 10"	29' 10"	26' 1"
1000S162-43	33	22' 4" e	19' 4" e	15' 10" e	22' 4" a	19' 4" a	15' 9" a	22' 4" e	19' 4" e	15' 10" e	22' 4" a	19' 4" a	15' 9" a
1000S200-43	33	24' 1" e	20' 11" e	17' 1" e	24' 1" a	20' 11" a	16' 6" a	24' 1" e	20' 11" e	17' 1" e	24' 1" a	20' 11" a	16' 6" a
1000S250-43	33	24' 10" e	21' 6" e	17' 6" e	24' 10" a	21' 6" a	16' 9" a	24' 10" e	21' 6" e	17' 6" e	24' 10" a	21' 6" a	16' 9" a
1000S162-54	50	27' 5"	24' 10"	21' 2"	30' 0" i	25' 11" i	21' 2" i	24' 10"	22' 7"	19' 9"	27' 11" i	25' 4" i	21' 2" i
1000S200-54	50	28' 8"	26' 0"	22' 9"	32' 2" i	27' 11" i	22' 9" i	26' 0"	23' 8"	20' 8"	29' 3" i	26' 7" i	22' 9" i
1000S250-54	50	30' 3"	27' 6"	23' 5"	33' 1" i	28' 8" i	23' 5" i	27' 6"	25' 0"	21' 10"	30' 10" i	28' 0" i	23' 5" i
1000S162-68	50	29' 8"	27' 0"	23' 7"	33' 4" i	30' 3" i	25' 0" i	27' 0"	24' 6"	21' 5"	30' 3"	27' 6" i	24' 0" i
1000S200-68	50	31' 0"	28' 2"	24' 7"	34' 10" i	31' 8" i	26' 9" i	28' 2"	25' 7"	22' 4"	31' 8"	28' 9"	25' 1" i
1000S250-68	50	32' 6"	29' 7"	25' 10"	36' 6" i	33' 2" i	27' 6" i	29' 7"	26' 10"	23' 5"	33' 2"	30' 2" i	26' 4" i
1000S162-97	50	33' 4"	30' 4"	26' 6"	37' 5"	34' 0"	29' 9"	30' 4"	27' 6"	24' 1"	34' 0"	30' 11"	27' 0"
1000S200-97	50	34' 10"	31' 8"	27' 8"	39' 1"	35' 6"	31' 0"	31' 8"	28' 9"	25' 1"	35' 6"	32' 3"	28' 2"
1000S250-97	50	36' 3"	32' 11"	28' 9"	40' 9"	37' 0"	32' 4"	32' 11"	29' 11"	26' 2"	37' 0"	33' 7"	29' 4"
1000S162-118	50	35' 4"	32' 1"	28' 0"	39' 8"	36' 0"	31' 6"	32' 1"	29' 2"	25' 6"	36' 0"	32' 9"	28' 7"
1000S200-118	50	36' 11"	33' 7"	29' 4"	41' 6"	37' 8"	32' 11"	33' 7"	30' 6"	26' 8"	37' 8"	34' 3"	29' 11"
1000S250-118	50	38' 6"	35' 0"	30' 7"	43' 2"	39' 3"	34' 4"	35' 0"	31' 9"	27' 9"	39' 3"	35' 8"	31' 2"
1200S162-54	50	31' 6" e	27' 11" e	22' 10" e	32' 3" a	27' 11" a	22' 10" a	28' 7" e	26' 0" e	22' 9" e	32' 2" a	27' 11" a	22' 10" a
1200S200-54	50	32' 11" e	29' 11" e	24' 8" e	34' 11" a	30' 3" a	24' 8" a	29' 11" e	27' 2" e	23' 9" e	33' 7" a	30' 3" a	24' 8" a
1200S250-54	50	34' 3" e	31' 2" e	25' 6" e	36' 0" a	31' 2" a	25' 6" a	31' 2" e	28' 4" e	24' 9" e	35' 0" a	31' 2" a	25' 6" a

See Allowable Floor Joist Span Table Notes on page 62.

Floor Joist Span Tables

SFIA
STEEL FRAMING INDUSTRY ASSOCIATION

10 psf Dead Load and 20 psf Live Load

		Live Load Deflection L/360						Live Load Deflection L/480					
		Single Span			Two Equal Spans			Single Span			Two Equal Spans		
		Spacing (in) o.c.			Spacing (in) o.c.			Spacing (in) o.c.			Spacing (in) o.c.		
Member	Fy (ksi)	12	16	24	12	16	24	12	16	24	12	16	24
1200S162-68	50	34' 3"	31' 1"	27' 1"	38' 4" i	33' 3" i	27' 1" i	31' 1"	28' 3"	24' 8"	34' 11" i	31' 9" i	27' 1" i
1200S200-68	50	35' 9"	32' 5"	28' 4"	40' 1" i	35' 9" i	29' 2" i	32' 5"	29' 6"	25' 9"	36' 5"	33' 1" i	28' 11" i
1200S250-68	50	37' 3"	33' 10"	29' 6"	41' 9" i	36' 11" i	30' 1" i	33' 10"	30' 9"	26' 10"	37' 11" i	34' 6" i	30' 1" i
1200S162-97	50	38' 10"	35' 3"	30' 10"	43' 7"	39' 7"	34' 7" i	35' 3"	32' 0"	28' 0"	39' 7"	36' 0"	31' 5"
1200S200-97	50	40' 5"	36' 8"	32' 1"	45' 4"	41' 3"	36' 0" i	36' 8"	33' 4"	29' 2"	41' 3"	37' 5"	32' 9"
1200S250-97	50	42' 0"	38' 2"	33' 4"	47' 1"	42' 10"	37' 5" i	38' 2"	34' 8"	30' 3"	42' 10"	38' 11"	34' 0"
1200S162-118	50	41' 3"	37' 6"	32' 9"	46' 4"	42' 1"	36' 9"	37' 6"	34' 1"	29' 9"	42' 1"	38' 3"	33' 5"
1200S200-118	50	43' 0"	39' 1"	34' 1"	48' 3"	43' 10"	38' 4"	39' 1"	35' 6"	31' 0"	43' 10"	39' 10"	34' 10"
1200S250-118	50	44' 8"	40' 7"	35' 5"	50' 2"	45' 7"	39' 9"	40' 7"	36' 10"	32' 2"	45' 7"	41' 5"	36' 2"
1200S300-118	50	46' 1"	41' 10"	36' 7"	51' 9"	47' 0"	41' 1"	41' 10"	38' 0"	33' 3"	47' 0"	42' 8"	37' 4"
1200S350-118	50	48' 5"	44' 0"	38' 5"	54' 5"	49' 5"	43' 2"	44' 0"	40' 0"	34' 11"	49' 5"	44' 11"	39' 3"
1400S200-54	50	37' 0" e	32' 1" e	26' 2" e	37' 0" a	32' 1" a	24' 5" a	33' 8" e	30' 7" e	26' 2" e	37' 0" a	32' 1" a	24' 5" a
1400S250-54	50	38' 6" e	33' 4" e	27' 2" e	38' 6" a	33' 2" a	24' 11" a	35' 0" e	31' 10" e	27' 2" e	38' 6" a	33' 2" a	24' 11" a
1400S300-54	50	39' 1" e	34' 1" e	27' 10" e	39' 5" a	33' 8" a	25' 3" a	35' 6" e	32' 3" e	27' 10" e	39' 5" a	33' 8" a	25' 3" a
1400S350-54	50	41' 9" e	37' 11" e	31' 4" e	44' 2" a	36' 1" a	26' 10" a	37' 11" e	34' 6" e	30' 1" e	42' 7" a	36' 1" a	26' 10" a
1400S200-68	50	40' 3"	36' 7"	31' 1"	44' 0" i	38' 1" i	31' 1" i	36' 7"	33' 3"	29' 0"	41' 0" i	37' 3" i	31' 1" i
1400S250-68	50	41' 10"	38' 0"	32' 3"	45' 8" i	39' 7" i	32' 3" i	38' 0"	34' 7"	30' 2"	42' 8" i	38' 10" i	32' 3" i
1400S300-68	50	43' 0"	39' 0"	33' 1"	46' 9" i	40' 6" i	33' 1" i	39' 0"	35' 6"	31' 0"	43' 10" i	39' 10" i	33' 1" i
1400S350-68	50	46' 1"	41' 10"	36' 7"	51' 9" i	45' 2" i	36' 11" i	41' 10"	38' 0"	33' 3"	47' 0" i	42' 8" i	36' 11" i
1400S200-97	50	45' 8"	41' 6"	36' 3"	51' 3"	46' 7" i	40' 5" i	41' 6"	37' 8"	32' 11"	46' 7"	42' 4"	37' 0" i
1400S250-97	50	47' 4"	43' 0"	37' 7"	53' 2"	48' 4" i	41' 11" i	43' 0"	39' 1"	34' 2"	48' 4"	43' 11"	38' 4" i
1400S300-97	50	48' 10"	44' 4"	38' 9"	54' 10"	49' 10" i	42' 11" i	44' 4"	40' 4"	35' 2"	49' 10"	45' 3"	39' 6" i
1400S350-97	50	51' 6"	46' 9"	40' 11"	57' 10"	52' 6" i	45' 11" i	46' 9"	42' 6"	37' 2"	52' 6"	47' 9"	41' 8" i
1400S200-118	50	48' 11"	44' 5"	38' 10"	54' 11"	49' 11"	43' 7" i	44' 5"	40' 4"	35' 3"	49' 11"	45' 4"	39' 7"
1400S250-118	50	50' 8"	46' 0"	40' 3"	56' 11"	51' 8"	45' 2" i	46' 0"	41' 10"	36' 6"	51' 8"	46' 11"	41' 0"
1400S300-118	50	52' 4"	47' 7"	41' 6"	58' 9"	53' 5"	46' 8" i	47' 7"	43' 2"	37' 9"	53' 5"	48' 6"	42' 4"
1400S350-118	50	54' 9"	49' 9"	43' 6"	61' 6"	55' 10"	48' 10"	49' 9"	45' 3"	39' 6"	55' 10"	50' 9"	44' 4"
1600S200-68	50	44' 7" e	40' 1" e	32' 9" e	46' 3" a	40' 1" a	32' 9" a	40' 6" e	36' 10" e	32' 2" e	45' 6" a	40' 1" a	32' 9" a
1600S250-68	50	46' 4" e	41' 9" e	34' 1" e	48' 3" a	41' 9" a	34' 1" a	42' 1" e	38' 3" e	33' 5" e	47' 3" a	41' 9" a	34' 1" a
1600S300-68	50	47' 6" e	42' 11" e	35' 1" e	49' 7" a	42' 11" a	35' 1" a	43' 2" e	39' 3" e	34' 3" e	48' 6" a	42' 11" a	35' 1" a
1600S350-68	50	50' 1" e	45' 6" e	39' 4" e	55' 7" a	48' 2" a	39' 0" a	45' 6" e	41' 4" e	36' 1" e	51' 1" a	46' 5" a	39' 0" a
1600S200-97	50	50' 9"	46' 2"	40' 4"	57' 0" i	51' 10" i	42' 10" i	46' 2"	41' 11"	36' 7"	51' 10"	47' 1"	41' 1" i
1600S250-97	50	52' 7"	47' 9"	41' 9"	59' 1" i	53' 8" i	44' 7" i	47' 9"	43' 5"	37' 11"	53' 8"	48' 9"	42' 7" i
1600S300-97	50	54' 2"	49' 2"	43' 0"	60' 10" i	55' 3" i	45' 9" i	49' 2"	44' 8"	39' 1"	55' 3"	50' 2"	43' 10" i
1600S350-97	50	56' 9"	51' 7"	45' 1"	63' 9"	57' 11" i	50' 7" i	51' 7"	46' 10"	40' 11"	57' 11"	52' 7"	45' 11" i
1600S200-118	50	54' 6"	49' 6"	43' 3"	61' 2"	55' 7"	48' 7" i	49' 6"	45' 0"	39' 4"	55' 7"	50' 6"	44' 2"
1600S250-118	50	56' 4"	51' 2"	44' 9"	63' 3"	57' 6"	50' 3" i	51' 2"	46' 6"	40' 8"	57' 6"	52' 3"	45' 8"
1600S300-118	50	58' 2"	52' 10"	46' 2"	65' 3"	59' 4"	51' 10" i	52' 10"	48' 0"	41' 11"	59' 4"	53' 11"	47' 1"
1600S350-118	50	60' 9"	55' 2"	48' 2"	68' 2"	61' 11"	54' 2" i	55' 2"	50' 2"	43' 10"	61' 11"	56' 4"	49' 2"

See Allowable Floor Joist Span Table Notes on page 62.

Floor Joist Span Tables

SFIA
STEEL FRAMING INDUSTRY ASSOCIATION

10 psf Dead Load and 30 psf Live Load

		Live Load Deflection L/360						Live Load Deflection L/480					
		Single Span			Two Equal Spans			Single Span			Two Equal Spans		
		Spacing (in) o.c.			Spacing (in) o.c.			Spacing (in) o.c.			Spacing (in) o.c.		
Member	Fy (ksi)	12	16	24	12	16	24	12	16	24	12	16	24
600S162-33	33	12' 7" e	10' 11" e	8' 11" e	12' 7" i	10' 11" a	8' 11" a	12' 6" e	10' 11" e	8' 11" e	12' 7" i	10' 11" a	8' 11" a
600S200-33	33	13' 5" e	11' 7" e	9' 6" e	13' 5" i	11' 7" a	9' 3" a	13' 1" e	11' 7" e	9' 6" e	13' 5" i	11' 7" a	9' 3" a
600S162-43	33	15' 0"	13' 5"	11' 0" e	15' 6" i	13' 5" i	11' 0" i	13' 8"	12' 5"	10' 10" e	15' 4" i	13' 5" i	11' 0" i
600S200-43	33	15' 9"	13' 10"	11' 4" e	16' 0" i	13' 10" i	11' 4" i	14' 4"	13' 0"	11' 4" e	16' 0" i	13' 10" i	11' 4" i
600S250-43	33	16' 5"	14' 3"	11' 7" e	16' 5" i	14' 3" i	11' 7" i	15' 0"	13' 7"	11' 7" e	16' 5" i	14' 3" i	11' 7" i
600S162-54	50	16' 1"	14' 7"	12' 9"	18' 1"	16' 5" i	14' 4" i	14' 7"	13' 3"	11' 7"	16' 5"	14' 11"	13' 0" i
600S200-54	50	16' 11"	15' 4"	13' 5"	19' 0"	17' 3" i	15' 1" i	15' 4"	14' 0"	12' 2"	17' 3"	15' 8"	13' 8" i
600S250-54	50	17' 8"	16' 0"	14' 0"	19' 10" i	18' 0" i	15' 6" i	16' 0"	14' 7"	12' 9"	18' 0"	16' 4" i	14' 3" i
600S162-68	50	17' 3"	15' 8"	13' 8"	19' 4"	17' 7"	15' 4" i	15' 8"	14' 3"	12' 5"	17' 7"	16' 0"	14' 0"
600S200-68	50	18' 2"	16' 6"	14' 5"	20' 4"	18' 6"	16' 2" i	16' 6"	15' 0"	13' 1"	18' 6"	16' 10"	14' 8"
600S250-68	50	19' 0"	17' 3"	15' 1"	21' 4"	19' 5"	16' 11" i	17' 3"	15' 8"	13' 9"	19' 5"	17' 8"	15' 5"
600S162-97	50	19' 1"	17' 4"	15' 2"	21' 6"	19' 6"	17' 0"	17' 4"	15' 9"	13' 9"	19' 6"	17' 9"	15' 6"
600S200-97	50	20' 2"	18' 4"	16' 0"	22' 7"	20' 7"	17' 11"	18' 4"	16' 8"	14' 6"	20' 7"	18' 8"	16' 4"
600S250-97	50	21' 2"	19' 3"	16' 9"	23' 9"	21' 7"	18' 10"	19' 3"	17' 6"	15' 3"	21' 7"	19' 7"	17' 2"
600S162-118	50	20' 2"	18' 4"	16' 0"	22' 8"	20' 7"	18' 0"	18' 4"	16' 8"	14' 7"	20' 7"	18' 9"	16' 4"
600S200-118	50	21' 4"	19' 4"	16' 11"	23' 11"	21' 9"	19' 0"	19' 4"	17' 7"	15' 4"	21' 9"	19' 9"	17' 3"
600S250-118	50	22' 5"	20' 4"	17' 9"	25' 2"	22' 10"	20' 0"	20' 4"	18' 6"	16' 2"	22' 10"	20' 9"	18' 2"
600S162-33	33	12' 7" e	10' 11" e	8' 11" e	12' 7" i	10' 11" a	8' 11" a	12' 6" e	10' 11" e	8' 11" e	12' 7" i	10' 11" a	8' 11" a
600S200-33	33	13' 5" e	11' 7" e	9' 6" e	13' 5" i	11' 7" a	9' 3" a	13' 1" e	11' 7" e	9' 6" e	13' 5" i	11' 7" a	9' 3" a
600S162-43	33	15' 0"	13' 5"	11' 0" e	15' 6" i	13' 5" i	11' 0" i	13' 8"	12' 5"	10' 10" e	15' 4" i	13' 5" i	11' 0" i
600S200-43	33	15' 9"	13' 10"	11' 4" e	16' 0" i	13' 10" i	11' 4" i	14' 4"	13' 0"	11' 4" e	16' 0" i	13' 10" i	11' 4" i
600S250-43	33	16' 5"	14' 3"	11' 7" e	16' 5" i	14' 3" i	11' 7" i	15' 0"	13' 7"	11' 7" e	16' 5" i	14' 3" i	11' 7" i
600S162-54	50	16' 1"	14' 7"	12' 9"	18' 1"	16' 5" i	14' 4" i	14' 7"	13' 3"	11' 7"	16' 5"	14' 11"	13' 0" i
600S200-54	50	16' 11"	15' 4"	13' 5"	19' 0"	17' 3" i	15' 1" i	15' 4"	14' 0"	12' 2"	17' 3"	15' 8"	13' 8" i
600S250-54	50	17' 8"	16' 0"	14' 0"	19' 10" i	18' 0" i	15' 6" i	16' 0"	14' 7"	12' 9"	18' 0"	16' 4" i	14' 3" i
600S162-68	50	17' 3"	15' 8"	13' 8"	19' 4"	17' 7"	15' 4" i	15' 8"	14' 3"	12' 5"	17' 7"	16' 0"	14' 0"
600S200-68	50	18' 2"	16' 6"	14' 5"	20' 4"	18' 6"	16' 2" i	16' 6"	15' 0"	13' 1"	18' 6"	16' 10"	14' 8"
600S250-68	50	19' 0"	17' 3"	15' 1"	21' 4"	19' 5"	16' 11" i	17' 3"	15' 8"	13' 9"	19' 5"	17' 8"	15' 5"
600S162-97	50	19' 1"	17' 4"	15' 2"	21' 6"	19' 6"	17' 0"	17' 4"	15' 9"	13' 9"	19' 6"	17' 9"	15' 6"
600S200-97	50	20' 2"	18' 4"	16' 0"	22' 7"	20' 7"	17' 11"	18' 4"	16' 8"	14' 6"	20' 7"	18' 8"	16' 4"
600S250-97	50	21' 2"	19' 3"	16' 9"	23' 9"	21' 7"	18' 10"	19' 3"	17' 6"	15' 3"	21' 7"	19' 7"	17' 2"
600S162-118	50	20' 2"	18' 4"	16' 0"	22' 8"	20' 7"	18' 0"	18' 4"	16' 8"	14' 7"	20' 7"	18' 9"	16' 4"
600S200-118	50	21' 4"	19' 4"	16' 11"	23' 11"	21' 9"	19' 0"	19' 4"	17' 7"	15' 4"	21' 9"	19' 9"	17' 3"
600S250-118	50	22' 5"	20' 4"	17' 9"	25' 2"	22' 10"	20' 0"	20' 4"	18' 6"	16' 2"	22' 10"	20' 9"	18' 2"

See Allowable Floor Joist Span Table Notes on page 62.

Floor Joist Span Tables

SFIA
STEEL FRAMING INDUSTRY ASSOCIATION

10 psf Dead Load and 30 psf Live Load

		Live Load Deflection L/360						Live Load Deflection L/480					
		Single Span			Two Equal Spans			Single Span			Two Equal Spans		
		Spacing (in) o.c.			Spacing (in) o.c.			Spacing (in) o.c.			Spacing (in) o.c.		
Member	Fy (ksi)	12	16	24	12	16	24	12	16	24	12	16	24
800S162-33	33	14' 6" e	12' 7" e	10' 3" e	14' 0" a	11' 5" a	8' 5" a	14' 6" e	12' 7" e	10' 3" e	14' 0" a	11' 5" a	8' 5" a
800S200-33	33	15' 7" e	13' 6" e	11' 0" e	14' 7" a	11' 10" a	8' 9" a	15' 7" e	13' 6" e	11' 0" e	14' 7" a	11' 10" a	8' 9" a
800S162-43	33	17' 6"	15' 2" e	12' 4" e	17' 6" i	15' 2" i	12' 4" a	17' 0"	15' 2" e	12' 4" e	17' 6" i	15' 2" i	12' 4" a
800S200-43	33	18' 8"	16' 2" e	13' 3" e	18' 8" i	16' 2" i	13' 3" a	18' 0"	16' 2" e	13' 3" e	18' 8" i	16' 2" i	13' 3" a
800S250-43	33	19' 2" e	16' 7" e	13' 7" e	19' 2" i	16' 7" i	13' 7" a	18' 9"	16' 7" e	13' 7" e	19' 2" i	16' 7" i	13' 7" a
800S162-54	50	20' 2"	18' 3"	16' 0"	22' 7" i	20' 3" i	16' 6" i	18' 3"	16' 7"	14' 6"	20' 6" i	18' 8" i	16' 4" i
800S200-54	50	21' 3"	19' 4"	16' 10"	23' 10" i	21' 7" i	17' 8" i	19' 4"	17' 6"	15' 4"	21' 8" i	19' 8" i	17' 2" i
800S250-54	50	22' 1"	20' 1"	17' 6"	24' 9" i	22' 1" i	18' 1" i	20' 1"	18' 3"	15' 11"	22' 6" i	20' 5" i	17' 10" i
800S162-68	50	21' 9"	19' 9"	17' 3"	24' 5"	22' 2" i	19' 5" i	19' 9"	18' 0"	15' 8"	22' 2"	20' 2"	17' 7" i
800S200-68	50	22' 10"	20' 9"	18' 1"	25' 7"	23' 3" i	20' 4" i	20' 9"	18' 10"	16' 5"	23' 3"	21' 2"	18' 6" i
800S250-68	50	23' 9"	21' 7"	18' 11"	26' 9"	24' 3" i	21' 2" i	21' 7"	19' 8"	17' 2"	24' 3"	22' 1"	19' 3" i
800S162-97	50	24' 2"	22' 0"	19' 2"	27' 2"	24' 8"	21' 7"	22' 0"	20' 0"	17' 5"	24' 8"	22' 5"	19' 7"
800S200-97	50	25' 4"	23' 1"	20' 2"	28' 6"	25' 11"	22' 7"	23' 1"	20' 11"	18' 4"	25' 11"	23' 6"	20' 6"
800S250-97	50	26' 6"	24' 1"	21' 1"	29' 9"	27' 1"	23' 7"	24' 1"	21' 11"	19' 1"	27' 1"	24' 7"	21' 6"
800S162-118	50	25' 7"	23' 3"	20' 4"	28' 9"	26' 1"	22' 10"	23' 3"	21' 2"	18' 5"	26' 1"	23' 9"	20' 9"
800S200-118	50	26' 10"	24' 5"	21' 4"	30' 2"	27' 5"	23' 11"	24' 5"	22' 2"	19' 5"	27' 5"	24' 11"	21' 9"
800S250-118	50	28' 1"	25' 6"	22' 4"	31' 7"	28' 8"	25' 1"	25' 6"	23' 2"	20' 3"	28' 8"	26' 1"	22' 9"
1000S162-43	33	19' 4" e	16' 9" e	13' 8" e	19' 4" a	16' 9" a	12' 10" a	19' 4" e	16' 9" e	13' 8" e	19' 4" a	16' 9" a	12' 10" a
1000S200-43	33	20' 11" e	18' 1" e	14' 9" e	20' 11" a	17' 10" a	13' 5" a	20' 11" e	18' 1" e	14' 9" e	20' 11" a	17' 10" a	13' 5" a
1000S250-43	33	21' 6" e	18' 7" e	15' 2" e	21' 6" a	18' 2" a	13' 7" a	21' 6" e	18' 7" e	15' 2" e	21' 6" a	18' 2" a	13' 7" a
1000S162-54	50	23' 11"	21' 9"	18' 4"	25' 11" i	22' 6" i	18' 4" i	21' 9"	19' 9"	17' 3"	24' 5" i	22' 2" i	18' 4" i
1000S200-54	50	25' 0"	22' 9"	19' 9"	27' 11" i	24' 2" i	19' 9" i	22' 9"	20' 8"	18' 1"	25' 6" i	23' 2" i	19' 9" i
1000S250-54	50	26' 5"	24' 0"	20' 3"	28' 8" i	24' 10" i	20' 3" i	24' 0"	21' 10"	19' 1"	26' 11" i	24' 6" i	20' 3" i
1000S162-68	50	25' 11"	23' 7"	20' 7"	29' 1" i	26' 6" i	21' 8" i	23' 7"	21' 5"	18' 8"	26' 6"	24' 0" i	21' 0" i
1000S200-68	50	27' 1"	24' 7"	21' 6"	30' 5" i	27' 8" i	23' 2" i	24' 7"	22' 4"	19' 7"	27' 8"	25' 1" i	21' 11" i
1000S250-68	50	28' 5"	25' 10"	22' 7"	31' 11" i	29' 0" i	23' 10" i	25' 10"	23' 5"	20' 6"	29' 0"	26' 4" i	23' 0" i
1000S162-97	50	29' 2"	26' 6"	23' 1"	32' 8"	29' 9"	26' 0" i	26' 6"	24' 1"	21' 0"	29' 9"	27' 0"	23' 7"
1000S200-97	50	30' 5"	27' 8"	24' 2"	34' 2"	31' 0"	27' 1" i	27' 8"	25' 1"	21' 11"	31' 0"	28' 2"	24' 8"
1000S250-97	50	31' 8"	28' 9"	25' 2"	35' 7"	32' 4"	28' 3" i	28' 9"	26' 2"	22' 10"	32' 4"	29' 4"	25' 8"
1000S162-118	50	30' 10"	28' 0"	24' 6"	34' 8"	31' 6"	27' 6"	28' 0"	25' 6"	22' 3"	31' 6"	28' 7"	25' 0"
1000S200-118	50	32' 3"	29' 4"	25' 7"	36' 3"	32' 11"	28' 9"	29' 4"	26' 8"	23' 3"	32' 11"	29' 11"	26' 1"
1000S250-118	50	33' 7"	30' 7"	26' 8"	37' 9"	34' 4"	30' 0"	30' 7"	27' 9"	24' 3"	34' 4"	31' 2"	27' 3"
1200S162-54	50	27' 6" e	24' 2" e	19' 9" e	27' 11" a	24' 2" a	19' 6" a	25' 0" e	22' 9" e	19' 9" e	27' 11" a	24' 2" a	19' 6" a
1200S200-54	50	28' 9" e	26' 2" e	21' 4" e	30' 3" a	26' 2" a	20' 6" a	26' 2" e	23' 9" e	20' 9" e	29' 4" a	26' 2" a	20' 6" a
1200S250-54	50	29' 11" e	27' 0" e	22' 1" e	31' 2" a	27' 0" a	20' 11" a	27' 3" e	24' 9" e	21' 7" e	30' 7" a	27' 0" a	20' 11" a
1200S162-68	50	29' 11"	27' 2"	23' 6"	33' 3" i	28' 9" i	23' 6" i	27' 2"	24' 8"	21' 7"	30' 6" i	27' 9" i	23' 6" i
1200S200-68	50	31' 2"	28' 4"	24' 9"	35' 0" i	30' 11" i	25' 3" i	28' 4"	25' 9"	22' 6"	31' 10" i	28' 11" i	25' 3" i
1200S250-68	50	32' 6"	29' 6"	25' 10"	36' 6" i	31' 11" i	26' 1" i	29' 6"	26' 10"	23' 5"	33' 2" i	30' 2" i	26' 1" i
1200S162-97	50	33' 11"	30' 10"	26' 11"	38' 1"	34' 7"	30' 2" i	30' 10"	28' 0"	24' 5"	34' 7"	31' 5"	27' 5" i
1200S200-97	50	35' 4"	32' 1"	28' 0"	39' 8"	36' 0"	31' 5" i	32' 1"	29' 2"	25' 5"	36' 0"	32' 9"	28' 7" i
1200S250-97	50	36' 8"	33' 4"	29' 1"	41' 2"	37' 5" i	32' 8" i	33' 4"	30' 3"	26' 5"	37' 5"	34' 0"	29' 8" i
1200S162-118	50	36' 1"	32' 9"	28' 7"	40' 6"	36' 9"	32' 1"	32' 9"	29' 9"	26' 0"	36' 9"	33' 5"	29' 2"
1200S200-118	50	37' 7"	34' 1"	29' 10"	42' 2"	38' 4"	33' 6"	34' 1"	31' 0"	27' 1"	38' 4"	34' 10"	30' 5"
1200S250-118	50	39' 0"	35' 5"	30' 11"	43' 9"	39' 9"	34' 9"	35' 5"	32' 2"	28' 2"	39' 9"	36' 2"	31' 7"
1200S300-118	50	40' 3"	36' 7"	31' 11"	45' 2"	41' 1"	35' 10"	36' 7"	33' 3"	29' 0"	41' 1"	37' 4"	32' 7"
1200S350-118	50	42' 4"	38' 5"	33' 7"	47' 6"	43' 2"	37' 8"	38' 5"	34' 11"	30' 6"	43' 2"	39' 3"	34' 3"

See Allowable Floor Joist Span Table Notes on page 62.

Floor Joist Span Tables

SFIA
STEEL FRAMING INDUSTRY ASSOCIATION

10 psf Dead Load and 30 psf Live Load

		Live Load Deflection L/360						Live Load Deflection L/480					
		Single Span			Two Equal Spans			Single Span			Two Equal Spans		
		Spacing (in) o.c.			Spacing (in) o.c.			Spacing (in) o.c.			Spacing (in) o.c.		
Member	Fy (ksi)	12	16	24	12	16	24	12	16	24	12	16	24
1400S200-54	50	32' 1" e	27' 9" e	22' 8" e	32' 1" a	26' 6" a	19' 10" a	29' 5" e	26' 8" e	22' 8" e	32' 1" a	26' 6" a	19' 10" a
1400S250-54	50	33' 4" e	28' 10" e	23' 7" e	33' 2" a	27' 1" a	20' 2" a	30' 7" e	27' 9" e	23' 7" e	33' 2" a	27' 1" a	20' 2" a
1400S300-54	50	34' 1" e	29' 7" e	24' 2" e	33' 8" a	27' 6" a	20' 5" a	31' 0" e	28' 2" e	24' 2" e	33' 8" a	27' 6" a	20' 5" a
1400S350-54	50	36' 6" e	33' 2" e	27' 1" e	36' 1" a	29' 4" a	21' 7" a	33' 2" e	30' 1" e	26' 4" e	36' 1" a	29' 4" a	21' 7" a
1400S200-68	50	35' 2"	31' 11"	26' 11"	38' 1" i	33' 0" i	26' 11" i	31' 11"	29' 0"	25' 4"	35' 10" i	32' 7" i	26' 11" i
1400S250-68	50	36' 7"	33' 3"	28' 0"	39' 7" i	34' 3" i	28' 0" i	33' 3"	30' 2"	26' 4"	37' 4" i	33' 11" i	28' 0" i
1400S300-68	50	37' 6"	34' 1"	28' 7"	40' 6" i	35' 1" i	28' 7" i	34' 1"	31' 0"	27' 1"	38' 3" i	34' 9" i	28' 7" i
1400S350-68	50	40' 3"	36' 7"	31' 11" e	45' 2" i	39' 2" i	31' 11" i	36' 7"	33' 3"	29' 0"	41' 1" i	37' 3" i	31' 11" i
1400S200-97	50	39' 11"	36' 3"	31' 8"	44' 10"	40' 8" i	35' 0" i	36' 3"	32' 11"	28' 9"	40' 8"	37' 0"	32' 4" i
1400S250-97	50	41' 5"	37' 7"	32' 10"	46' 6"	42' 3" i	36' 3" i	37' 7"	34' 2"	29' 10"	42' 3"	38' 4"	33' 6" i
1400S300-97	50	42' 8"	38' 9"	33' 10"	47' 11"	43' 6" i	37' 2" i	38' 9"	35' 2"	30' 9"	43' 6"	39' 6"	34' 6" i
1400S350-97	50	45' 0"	40' 11"	35' 8"	50' 6"	45' 11" i	40' 1" i	40' 11"	37' 2"	32' 5"	45' 11"	41' 8"	36' 5" i
1400S200-118	50	42' 9"	38' 10"	33' 11"	48' 0"	43' 7"	38' 1" i	38' 10"	35' 3"	30' 10"	43' 7"	39' 7"	34' 7"
1400S250-118	50	44' 3"	40' 3"	35' 2"	49' 8"	45' 2"	39' 5" i	40' 3"	36' 6"	31' 11"	45' 2"	41' 0"	35' 10"
1400S300-118	50	45' 9"	41' 6"	36' 3"	51' 4"	46' 8"	40' 9" i	41' 6"	37' 9"	33' 0"	46' 8"	42' 4"	37' 0"
1400S350-118	50	47' 10"	43' 6"	38' 0"	53' 9"	48' 10"	42' 8" i	43' 6"	39' 6"	34' 6"	48' 10"	44' 4"	38' 9"
1600S200-68	50	38' 11" e	34' 8" e	28' 4" e	40' 1" a	34' 8" a	28' 4" a	35' 5" e	32' 2" e	28' 1" e	39' 9" a	34' 8" a	28' 4" a
1600S250-68	50	40' 6" e	36' 2" e	29' 6" e	41' 9" a	36' 2" a	29' 3" a	36' 9" e	33' 5" e	29' 2" e	41' 4" a	36' 2" a	29' 3" a
1600S300-68	50	41' 6" e	37' 2" e	30' 4" e	42' 11" a	37' 2" a	29' 9" a	37' 9" e	34' 3" e	29' 11" e	42' 4" a	37' 2" a	29' 9" a
1600S350-68	50	43' 9" e	39' 9" e	34' 0" e	48' 2" a	41' 8" a	31' 10" a	39' 9" e	36' 1" e	31' 7" e	44' 7" a	40' 6" a	31' 10" a
1600S200-97	50	44' 4"	40' 4"	35' 3"	49' 10" i	45' 3" i	37' 1" i	40' 4"	36' 7"	32' 0"	45' 3"	41' 1" i	35' 11" i
1600S250-97	50	45' 11"	41' 9"	36' 6"	51' 7" i	46' 10" i	38' 7" i	41' 9"	37' 11"	33' 2"	46' 10"	42' 7" i	37' 2" i
1600S300-97	50	47' 4"	43' 0"	37' 7"	53' 1" i	48' 3" i	39' 8" i	43' 0"	39' 1"	34' 1"	48' 3"	43' 10" i	38' 4" i
1600S350-97	50	49' 7"	45' 1"	39' 4"	55' 8" i	50' 7" i	43' 10" i	45' 1"	40' 11"	35' 9"	50' 7"	45' 11" i	40' 2" i
1600S200-118	50	47' 7"	43' 3"	37' 9"	53' 5"	48' 7"	42' 5" i	43' 3"	39' 4"	34' 4"	48' 7"	44' 2"	38' 7" i
1600S250-118	50	49' 3"	44' 9"	39' 1"	55' 3"	50' 3"	43' 10" i	44' 9"	40' 8"	35' 6"	50' 3"	45' 8"	39' 10" i
1600S300-118	50	50' 9"	46' 2"	40' 4"	57' 0"	51' 10" i	45' 3" i	46' 2"	41' 11"	36' 7"	51' 10"	47' 1"	41' 1" i
1600S350-118	50	53' 1"	48' 2"	42' 1"	59' 7"	54' 2"	47' 3" i	48' 2"	43' 10"	38' 3"	54' 2"	49' 2"	43' 0" i

See Allowable Floor Joist Span Table Notes on page 62.

Floor Joist Span Tables

SFIA
STEEL FRAMING INDUSTRY ASSOCIATION

10 psf Dead Load and 40 psf Live Load

		Live Load Deflection L/360						Live Load Deflection L/480					
		Single Span			Two Equal Spans			Single Span			Two Equal Spans		
		Spacing (in) o.c.			Spacing (in) o.c.			Spacing (in) o.c.			Spacing (in) o.c.		
Member	Fy (ksi)	12	16	24	12	16	24	12	16	24	12	16	24
600S162-33	33	11' 3" e	9' 9" e	7' 11" e	11' 3" i	9' 9" a	7' 7" a	11' 3" e	9' 9" e	7' 11" e	11' 3" i	9' 9" a	7' 7" a
600S200-33	33	12' 0" e	10' 5" e	8' 6" e	12' 0" a	10' 5" a	7' 11" a	11' 11" e	10' 5" e	8' 6" e	12' 0" a	10' 5" a	7' 11" a
600S162-43	33	13' 8"	12' 0" e	9' 10" e	13' 11" i	12' 0" i	9' 10" a	12' 5"	11' 3"	9' 10" e	13' 11" i	12' 0" i	9' 10" a
600S200-43	33	14' 4"	12' 5" e	10' 2" e	14' 4" i	12' 5" i	10' 2" a	13' 0"	11' 10"	10' 2" e	14' 4" i	12' 5" i	10' 2" a
600S250-43	33	14' 8"	12' 9" e	10' 5" e	14' 8" i	12' 9" i	10' 5" a	13' 7"	12' 4" e	10' 5" e	14' 8" i	12' 9" i	10' 5" a
600S162-54	50	14' 7"	13' 3"	11' 7"	16' 5" i	14' 11" i	13' 0" i	13' 3"	12' 1"	10' 7"	14' 11"	13' 7" i	11' 10" i
600S200-54	50	15' 4"	14' 0"	12' 2"	17' 3" i	15' 8" i	13' 6" i	14' 0"	12' 8"	11' 1"	15' 8"	14' 3" i	12' 5" i
600S250-54	50	16' 0"	14' 7"	12' 9"	18' 0" i	16' 4" i	13' 10" i	14' 7"	13' 3"	11' 7"	16' 4"	14' 10" i	13' 0" i
600S162-68	50	15' 8"	14' 3"	12' 5"	17' 7"	16' 0"	14' 0" i	14' 3"	12' 11"	11' 4"	16' 0"	14' 6"	12' 8"
600S200-68	50	16' 6"	15' 0"	13' 1"	18' 6"	16' 10"	14' 8" i	15' 0"	13' 7"	11' 11"	16' 10"	15' 3"	13' 4"
600S250-68	50	17' 3"	15' 8"	13' 9"	19' 5"	17' 8" i	15' 5" i	15' 8"	14' 3"	12' 6"	17' 8"	16' 0"	14' 0" i
600S162-97	50	17' 4"	15' 9"	13' 9"	19' 6"	17' 9"	15' 6"	15' 9"	14' 4"	12' 6"	17' 9"	16' 1"	14' 1"
600S200-97	50	18' 4"	16' 8"	14' 6"	20' 7"	18' 8"	16' 4"	16' 8"	15' 1"	13' 2"	18' 8"	17' 0"	14' 10"
600S250-97	50	19' 3"	17' 6"	15' 3"	21' 7"	19' 7"	17' 2"	17' 6"	15' 10"	13' 10"	19' 7"	17' 10"	15' 7"
600S162-118	50	18' 4"	16' 8"	14' 7"	20' 7"	18' 9"	16' 4"	16' 8"	15' 2"	13' 3"	18' 9"	17' 0"	14' 10"
600S200-118	50	19' 4"	17' 7"	15' 4"	21' 9"	19' 9"	17' 3"	17' 7"	16' 0"	14' 0"	19' 9"	17' 11"	15' 8"
600S250-118	50	20' 4"	18' 6"	16' 2"	22' 10"	20' 9"	18' 2"	18' 6"	16' 10"	14' 8"	20' 9"	18' 10"	16' 6"
800S162-33	33	13' 0" e	11' 3" e	9' 2" e	11' 11" a	9' 8" a	7' 1" a	13' 0" e	11' 3" e	9' 2" e	11' 11" a	9' 8" a	7' 1" a
800S200-33	33	13' 11" e	12' 1" e	9' 6" e	12' 5" a	10' 0" a	7' 3" a	13' 11" e	12' 1" e	9' 6" e	12' 5" a	10' 0" a	7' 3" a
800S162-43	33	15' 8" e	13' 6" e	11' 1" e	15' 8" i	13' 6" a	11' 1" a	15' 5" e	13' 6" e	11' 1" e	15' 8" i	13' 6" a	11' 1" a
800S200-43	33	16' 9" e	14' 6" e	11' 10" e	16' 9" i	14' 6" a	11' 9" a	16' 4" e	14' 6" e	11' 10" e	16' 9" i	14' 6" a	11' 9" a
800S250-43	33	17' 2" e	14' 10" e	12' 2" e	17' 2" i	14' 10" a	12' 0" a	17' 0" e	14' 10" e	12' 2" e	17' 2" i	14' 10" a	12' 0" a
800S162-54	50	18' 3"	16' 7"	14' 6"	20' 6" i	18' 1" i	14' 10" i	16' 7"	15' 1"	13' 2"	18' 8" i	16' 11" i	14' 10" i
800S200-54	50	19' 4"	17' 6"	15' 4"	21' 8" i	19' 4" i	15' 9" i	17' 6"	15' 11"	13' 11"	19' 8" i	17' 11" i	15' 7" i
800S250-54	50	20' 1"	18' 3"	15' 11"	22' 6" i	19' 9" i	16' 2" i	18' 3"	16' 7"	14' 6"	20' 5" i	18' 7" i	16' 2" i
800S162-68	50	19' 9"	18' 0"	15' 8"	22' 2" i	20' 2" i	17' 4" i	18' 0"	16' 4"	14' 3"	20' 2"	18' 4"	16' 0" i
800S200-68	50	20' 9"	18' 10"	16' 5"	23' 3"	21' 2" i	18' 6" i	18' 10"	17' 1"	14' 11"	21' 2"	19' 2"	16' 9" i
800S250-68	50	21' 7"	19' 8"	17' 2"	24' 3" i	22' 1" i	18' 11" i	19' 8"	17' 10"	15' 7"	22' 1"	20' 0" i	17' 6" i
800S162-97	50	22' 0"	20' 0"	17' 5"	24' 8"	22' 5"	19' 7"	20' 0"	18' 2"	15' 10"	22' 5"	20' 4"	17' 10"
800S200-97	50	23' 1"	20' 11"	18' 4"	25' 11"	23' 6"	20' 6"	20' 11"	19' 0"	16' 7"	23' 6"	21' 4"	18' 8"
800S250-97	50	24' 1"	21' 11"	19' 1"	27' 1"	24' 7"	21' 6"	21' 11"	19' 11"	17' 4"	24' 7"	22' 4"	19' 6"
800S162-118	50	23' 3"	21' 2"	18' 5"	26' 1"	23' 9"	20' 9"	21' 2"	19' 2"	16' 9"	23' 9"	21' 7"	18' 10"
800S200-118	50	24' 5"	22' 2"	19' 5"	27' 5"	24' 11"	21' 9"	22' 2"	20' 2"	17' 7"	24' 11"	22' 8"	19' 9"
800S250-118	50	25' 6"	23' 2"	20' 3"	28' 8"	26' 1"	22' 9"	23' 2"	21' 1"	18' 5"	26' 1"	23' 8"	20' 8"
1000S162-43	33	17' 4" e	15' 0" e	12' 3" e	17' 4" a	14' 8" a	10' 11" a	17' 4" e	15' 0" e	12' 3" e	17' 4" a	14' 8" a	10' 11" a
1000S200-43	33	18' 8" e	16' 2" e	13' 2" e	18' 8" a	15' 4" a	11' 4" a	18' 8" e	16' 2" e	13' 2" e	18' 8" a	15' 4" a	11' 4" a
1000S250-43	33	19' 3" e	16' 8" e	13' 7" e	19' 0" a	15' 7" a	11' 6" a	19' 3" e	16' 8" e	13' 7" e	19' 0" a	15' 7" a	11' 6" a
1000S162-54	50	21' 9"	19' 9"	16' 5"	23' 2" i	20' 1" i	16' 5" i	19' 9"	17' 11"	15' 8"	22' 2" i	20' 1" i	16' 5" i
1000S200-54	50	22' 9"	20' 8"	17' 8" e	24' 11" i	21' 7" i	17' 8" i	20' 8"	18' 9"	16' 5"	23' 2" i	21' 1" i	17' 8" i
1000S250-54	50	24' 0"	21' 10"	18' 1" e	25' 7" i	22' 2" i	18' 1" i	21' 10"	19' 10"	17' 4" e	24' 6" i	22' 2" i	18' 1" i
1000S162-68	50	23' 7"	21' 5"	18' 8"	26' 6" i	23' 9" i	19' 5" i	21' 5"	19' 5"	17' 0"	24' 0" i	21' 10" i	19' 1" i
1000S200-68	50	24' 7"	22' 4"	19' 7"	27' 8" i	25' 1" i	20' 9" i	22' 4"	20' 4"	17' 9"	25' 1" i	22' 10" i	19' 11" i
1000S250-68	50	25' 10"	23' 5"	20' 6"	29' 0" i	26' 1" i	21' 4" i	23' 5"	21' 4"	18' 7"	26' 4" i	23' 11" i	20' 11" i
1000S162-97	50	26' 6"	24' 1"	21' 0"	29' 9"	27' 0"	23' 7" i	24' 1"	21' 10"	19' 1"	27' 0"	24' 6"	21' 5"
1000S200-97	50	27' 8"	25' 1"	21' 11"	31' 0"	28' 2"	24' 8" i	25' 1"	22' 10"	19' 11"	28' 2"	25' 7"	22' 5"
1000S250-97	50	28' 9"	26' 2"	22' 10"	32' 4"	29' 4"	25' 8" i	26' 2"	23' 9"	20' 9"	29' 4"	26' 8"	23' 4"
1000S162-118	50	28' 0"	25' 6"	22' 3"	31' 6"	28' 7"	25' 0"	25' 6"	23' 2"	20' 3"	28' 7"	26' 0"	22' 8"
1000S200-118	50	29' 4"	26' 8"	23' 3"	32' 11"	29' 11"	26' 1"	26' 8"	24' 2"	21' 2"	29' 11"	27' 2"	23' 9"
1000S250-118	50	30' 7"	27' 9"	24' 3"	34' 4"	31' 2"	27' 3"	27' 9"	25' 3"	22' 0"	31' 2"	28' 4"	24' 9"

See Allowable Floor Joist Span Table Notes on page 62.

Floor Joist Span Tables

SFIA
STEEL FRAMING INDUSTRY ASSOCIATION

10 psf Dead Load and 40 psf Live Load

		Live Load Deflection L/360						Live Load Deflection L/480					
		Single Span			Two Equal Spans			Single Span			Two Equal Spans		
		Spacing (in) o.c.			Spacing (in) o.c.			Spacing (in) o.c.			Spacing (in) o.c.		
Member	Fy (ksi)	12	16	24	12	16	24	12	16	24	12	16	24
1200S162-54	50	25' 0" e	21' 8" e	17' 8" e	25' 0" a	21' 8" a	16' 9" a	22' 9" e	20' 8" e	17' 8" e	25' 0" a	21' 8" a	16' 9" a
1200S200-54	50	26' 2" e	23' 5" e	19' 1" e	27' 0" a	23' 3" a	17' 6" a	23' 9" e	21' 7" e	18' 10" e	26' 8" a	23' 3" a	17' 6" a
1200S250-54	50	27' 3" e	24' 2" e	19' 9" e	27' 11" a	23' 9" a	17' 10" a	24' 9" e	22' 6" e	19' 7" e	27' 9" a	23' 9" a	17' 10" a
1200S162-68	50	27' 2"	24' 8"	21' 0"	29' 8" i	25' 9" i	21' 0" i	24' 8"	22' 5"	19' 7"	27' 9" i	25' 2" i	21' 0" i
1200S200-68	50	28' 4"	25' 9"	22' 6"	31' 10" i	27' 8" i	22' 7" i	25' 9"	23' 5"	20' 5"	28' 11" i	26' 3" i	22' 7" i
1200S250-68	50	29' 6"	26' 10"	23' 4"	33' 0" i	28' 7" i	23' 4" i	26' 10"	24' 5"	21' 4"	30' 2" i	27' 4" i	23' 4" i
1200S162-97	50	30' 10"	28' 0"	24' 5"	34' 7"	31' 5" i	27' 3" i	28' 0"	25' 5"	22' 3"	31' 5"	28' 7"	24' 11" i
1200S200-97	50	32' 1"	29' 2"	25' 5"	36' 0"	32' 9" i	28' 7" i	29' 2"	26' 6"	23' 1"	32' 9"	29' 9"	26' 0" i
1200S250-97	50	33' 4"	30' 3"	26' 5"	37' 5"	34' 0" i	29' 8" i	30' 3"	27' 6"	24' 0"	34' 0"	30' 11"	27' 0" i
1200S162-118	50	32' 9"	29' 9"	26' 0"	36' 9"	33' 5"	29' 2" i	29' 9"	27' 0"	23' 7"	33' 5"	30' 4"	26' 6"
1200S200-118	50	34' 1"	31' 0"	27' 1"	38' 4"	34' 10"	30' 5" i	31' 0"	28' 2"	24' 7"	34' 10"	31' 7"	27' 7"
1200S250-118	50	35' 5"	32' 2"	28' 2"	39' 9"	36' 2"	31' 7" i	32' 2"	29' 3"	25' 7"	36' 2"	32' 10"	28' 8"
1200S300-118	50	36' 7"	33' 3"	29' 0"	41' 1"	37' 4"	32' 7" i	33' 3"	30' 2"	26' 4"	37' 4"	33' 11"	29' 7"
1200S350-118	50	38' 5"	34' 11"	30' 6"	43' 2"	39' 3"	34' 3" i	34' 11"	31' 9"	27' 9"	39' 3"	35' 8"	31' 1"
1400S200-54	50	28' 8" e	24' 10" e	20' 3" e	27' 9" a	22' 8" a	16' 9" a	26' 8" e	24' 3" e	20' 3" e	27' 9" a	22' 8" a	16' 9" a
1400S250-54	50	29' 10" e	25' 10" e	21' 1" e	28' 5" a	23' 1" a	17' 0" a	27' 9" e	25' 3" e	21' 1" e	28' 5" a	23' 1" a	17' 0" a
1400S300-54	50	30' 6" e	26' 5" e	21' 7" e	28' 9" a	23' 5" a	17' 3" a	28' 2" e	25' 7" e	21' 7" e	28' 9" a	23' 5" a	17' 3" a
1400S350-54	50	33' 2" e	29' 9" e	23' 6" e	30' 9" a	24' 10" a	18' 1" a	30' 1" e	27' 4" e	23' 6" e	30' 9" a	24' 10" a	18' 1" a
1400S200-68	50	31' 11"	29' 0"	24' 1" e	34' 1" i	29' 6" i	24' 1" i	29' 0"	26' 4"	23' 0"	32' 7" i	29' 6" i	24' 1" i
1400S250-68	50	33' 3"	30' 2"	25' 0" e	35' 4" i	30' 8" i	25' 0" i	30' 2"	27' 5"	24' 0"	33' 11" i	30' 8" i	25' 0" i
1400S300-68	50	34' 1"	31' 0"	25' 7" e	36' 2" i	31' 4" i	25' 7" i	31' 0"	28' 2"	24' 7" e	34' 9" i	31' 4" i	25' 7" i
1400S350-68	50	36' 7"	33' 3"	28' 7" e	40' 5" i	35' 0" i	27' 9" i	33' 3"	30' 2"	26' 4" e	37' 3" i	33' 11" i	27' 9" i
1400S200-97	50	36' 3"	32' 11"	28' 9"	40' 8" i	37' 0" i	31' 4" i	32' 11"	29' 11"	26' 2"	37' 0"	33' 7" i	29' 4" i
1400S250-97	50	37' 7"	34' 2"	29' 10"	42' 3" i	38' 4" i	32' 6" i	34' 2"	31' 0"	27' 1"	38' 4"	34' 10" i	30' 5" i
1400S300-97	50	38' 9"	35' 2"	30' 9"	43' 6" i	39' 6" i	33' 3" i	35' 2"	32' 0"	27' 11"	39' 6"	35' 11" i	31' 4" i
1400S350-97	50	40' 11"	37' 2"	32' 5"	45' 11" i	41' 8" i	36' 5" i	37' 2"	33' 9"	29' 6"	41' 8"	37' 11" i	33' 1" i
1400S200-118	50	38' 10"	35' 3"	30' 10"	43' 7"	39' 7"	34' 7" i	35' 3"	32' 0"	28' 0"	39' 7"	36' 0"	31' 5"
1400S250-118	50	40' 3"	36' 6"	31' 11"	45' 2"	41' 0"	35' 10" i	36' 6"	33' 2"	29' 0"	41' 0"	37' 3"	32' 7"
1400S300-118	50	41' 6"	37' 9"	33' 0"	46' 8"	42' 4"	37' 0" i	37' 9"	34' 3"	29' 11"	42' 4"	38' 6"	33' 8" i
1400S350-118	50	43' 6"	39' 6"	34' 6"	48' 10"	44' 4"	38' 9" i	39' 6"	35' 11"	31' 4"	44' 4"	40' 4"	35' 2"
1600S200-68	50	35' 5" e	31' 0" e	25' 4" e	35' 10" a	31' 0" a	24' 5" a	32' 2" e	29' 2" e	25' 4" e	35' 10" a	31' 0" a	24' 5" a
1600S250-68	50	36' 9" e	32' 4" e	26' 5" e	37' 4" a	32' 4" a	25' 1" a	33' 5" e	30' 4" e	26' 5" e	37' 4" a	32' 4" a	25' 1" a
1600S300-68	50	37' 9" e	33' 3" e	27' 2" e	38' 5" a	33' 3" a	25' 5" a	34' 3" e	31' 2" e	27' 2" e	38' 5" a	33' 3" a	25' 5" a
1600S350-68	50	39' 9" e	36' 1" e	30' 5" e	43' 1" a	36' 3" a	27' 1" a	36' 1" e	32' 10" e	28' 8" e	40' 6" a	36' 3" a	27' 1" a
1600S200-97	50	40' 4"	36' 7"	32' 0"	45' 3" i	40' 8" i	33' 2" i	36' 7"	33' 3"	29' 1"	41' 1"	37' 4" i	32' 8" i
1600S250-97	50	41' 9"	37' 11"	33' 2"	46' 10" i	42' 3" i	34' 6" i	37' 11"	34' 6"	30' 1"	42' 7"	38' 8" i	33' 10" i
1600S300-97	50	43' 0"	39' 1"	34' 1"	48' 3" i	43' 5" i	35' 5" i	39' 1"	35' 6"	31' 0"	43' 10"	39' 10" i	34' 10" i
1600S350-97	50	45' 1"	40' 11"	35' 9"	50' 7" i	45' 11" i	39' 2" i	40' 11"	37' 2"	32' 6"	45' 11"	41' 9" i	36' 6" i
1600S200-118	50	43' 3"	39' 4"	34' 4"	48' 7"	44' 2" i	38' 6" i	39' 4"	35' 9"	31' 2"	44' 2"	40' 1"	35' 0" i
1600S250-118	50	44' 9"	40' 8"	35' 6"	50' 3"	45' 8" i	39' 10" i	40' 8"	36' 11"	32' 3"	45' 8"	41' 6"	36' 3" i
1600S300-118	50	46' 2"	41' 11"	36' 7"	51' 10"	47' 1" i	41' 1" i	41' 11"	38' 1"	33' 3"	47' 1"	42' 9"	37' 4" i
1600S350-118	50	48' 2"	43' 10"	38' 3"	54' 2"	49' 2" i	43' 0" i	43' 10"	39' 10"	34' 9"	49' 2"	44' 8"	39' 0" i

See Allowable Floor Joist Span Table Notes on page 62.

Floor Joist Span Tables

SFIA
STEEL FRAMING INDUSTRY ASSOCIATION

10 psf Dead Load and 50 psf Live Load

		Live Load Deflection L/360						Live Load Deflection L/480					
		Single Span			Two Equal Spans			Single Span			Two Equal Spans		
		Spacing (in) o.c.			Spacing (in) o.c.			Spacing (in) o.c.			Spacing (in) o.c.		
Member	Fy (ksi)	12	16	24	12	16	24	12	16	24	12	16	24
600S162-33	33	10' 3" e	8' 11" e	7' 3" e	10' 3" a	8' 11" a	6' 8" a	10' 3" e	8' 11" e	7' 3" e	10' 3" a	8' 11" a	6' 8" a
600S200-33	33	10' 11" e	9' 6" e	7' 9" e	10' 11" a	9' 3" a	6' 11" a	10' 11" e	9' 6" e	7' 9" e	10' 11" a	9' 3" a	6' 11" a
600S162-43	33	12' 8"	11' 0" e	9' 0" e	12' 8" i	11' 0" i	9' 0" a	11' 6"	10' 5" e	9' 0" e	12' 8" i	11' 0" i	9' 0" a
600S200-43	33	13' 1"	11' 4" e	9' 3" e	13' 1" i	11' 4" i	9' 3" a	12' 1"	11' 0" e	9' 3" e	13' 1" i	11' 4" i	9' 3" a
600S250-43	33	13' 5" e	11' 7" e	9' 6" e	13' 5" i	11' 7" i	9' 6" a	12' 8"	11' 6" e	9' 6" e	13' 5" i	11' 7" i	9' 6" a
600S162-54	50	13' 7"	12' 4"	10' 9"	15' 3" i	13' 10" i	12' 0" i	12' 4"	11' 2"	9' 9"	13' 10"	12' 7" i	11' 0" i
600S200-54	50	14' 3"	13' 0"	11' 4"	16' 0" i	14' 7" i	12' 4" i	13' 0"	11' 9"	10' 3"	14' 7"	13' 3" i	11' 7" i
600S250-54	50	14' 11"	13' 6"	11' 10"	16' 8" i	15' 2" i	12' 8" i	13' 6"	12' 3"	10' 9"	15' 2" i	13' 9" i	12' 1" i
600S162-68	50	14' 7"	13' 3"	11' 7"	16' 4"	14' 10"	13' 0" i	13' 3"	12' 0"	10' 6"	14' 10"	13' 6"	11' 9" i
600S200-68	50	15' 4"	13' 11"	12' 2"	17' 2"	15' 7"	13' 8" i	13' 11"	12' 8"	11' 0"	15' 7"	14' 2"	12' 5" i
600S250-68	50	16' 1"	14' 7"	12' 9"	18' 0"	16' 4" i	14' 4" i	14' 7"	13' 3"	11' 7"	16' 4"	14' 10"	13' 0" i
600S162-97	50	16' 2"	14' 8"	12' 10"	18' 1"	16' 5"	14' 4"	14' 8"	13' 4"	11' 8"	16' 5"	14' 11"	13' 1"
600S200-97	50	17' 0"	15' 5"	13' 6"	19' 1"	17' 4"	15' 2"	15' 5"	14' 0"	12' 3"	17' 4"	15' 9"	13' 9"
600S250-97	50	17' 10"	16' 3"	14' 2"	20' 0"	18' 2"	15' 11"	16' 3"	14' 9"	12' 10"	18' 2"	16' 6"	14' 5"
600S162-118	50	17' 0"	15' 6"	13' 6"	19' 1"	17' 5"	15' 2"	15' 6"	14' 1"	12' 3"	17' 5"	15' 9"	13' 9"
600S200-118	50	18' 0"	16' 4"	14' 3"	20' 2"	18' 4"	16' 0"	16' 4"	14' 10"	13' 0"	18' 4"	16' 8"	14' 7"
600S250-118	50	18' 11"	17' 2"	15' 0"	21' 3"	19' 3"	16' 10"	17' 2"	15' 7"	13' 7"	19' 3"	17' 6"	15' 4"
800S162-33	33	11' 10" e	10' 3" e	7' 11" e	10' 6" a	8' 5" a	6' 2" a	11' 10" e	10' 3" e	7' 11" e	10' 6" a	8' 5" a	6' 2" a
800S200-33	33	12' 8" e	11' 0" e	7' 11" e	10' 10" a	8' 9" a	6' 4" a	12' 8" e	11' 0" e	7' 11" e	10' 10" a	8' 9" a	6' 4" a
800S162-43	33	14' 3" e	12' 4" e	10' 1" e	14' 3" i	12' 4" a	10' 0" a	14' 3" e	12' 4" e	10' 1" e	14' 3" i	12' 4" a	10' 0" a
800S200-43	33	15' 3" e	13' 3" e	10' 10" e	15' 3" a	13' 3" a	10' 5" a	15' 2" e	13' 3" e	10' 10" e	15' 3" a	13' 3" a	10' 5" a
800S250-43	33	15' 8" e	13' 7" e	11' 1" e	15' 8" a	13' 7" a	10' 6" a	15' 8" e	13' 7" e	11' 1" e	15' 8" a	13' 7" a	10' 6" a
800S162-54	50	17' 0"	15' 5"	13' 6"	19' 1" i	16' 6" i	13' 6" i	15' 5"	14' 0"	12' 3"	17' 4" i	15' 9" i	13' 6" i
800S200-54	50	17' 11"	16' 3"	14' 3"	20' 1" i	17' 8" i	14' 5" i	16' 3"	14' 9"	12' 11"	18' 3" i	16' 7" i	14' 5" i
800S250-54	50	18' 7"	16' 11"	14' 9" e	20' 10" i	18' 1" i	14' 9" i	16' 11"	15' 4"	13' 5"	19' 0" i	17' 3" i	14' 9" i
800S162-68	50	18' 4"	16' 8"	14' 7"	20' 7" i	18' 9" i	15' 10" i	16' 8"	15' 2"	13' 3"	18' 9"	17' 0" i	14' 10" i
800S200-68	50	19' 3"	17' 6"	15' 3"	21' 7" i	19' 7" i	17' 2" i	17' 6"	15' 11"	13' 10"	19' 7"	17' 10" i	15' 7" i
800S250-68	50	20' 1"	18' 3"	15' 11"	22' 6" i	20' 6" i	17' 3" i	18' 3"	16' 7"	14' 6"	20' 6"	18' 7" i	16' 3" i
800S162-97	50	20' 5"	18' 6"	16' 2"	22' 11"	20' 10"	18' 2" i	18' 6"	16' 10"	14' 9"	20' 10"	18' 11"	16' 6"
800S200-97	50	21' 5"	19' 5"	17' 0"	24' 0"	21' 10"	19' 1"	19' 5"	17' 8"	15' 5"	21' 10"	19' 10"	17' 4"
800S250-97	50	22' 4"	20' 4"	17' 9"	25' 1"	22' 10"	19' 11" i	20' 4"	18' 5"	16' 1"	22' 10"	20' 9"	18' 1"
800S162-118	50	21' 7"	19' 7"	17' 2"	24' 3"	22' 0"	19' 3"	19' 7"	17' 10"	15' 7"	22' 0"	20' 0"	17' 6"
800S200-118	50	22' 8"	20' 7"	18' 0"	25' 5"	23' 1"	20' 2"	20' 7"	18' 8"	16' 4"	23' 1"	21' 0"	18' 4"
800S250-118	50	23' 8"	21' 6"	18' 10"	26' 7"	24' 2"	21' 2"	21' 6"	19' 7"	17' 1"	24' 2"	22' 0"	19' 2"
1000S162-43	33	15' 10" e	13' 8" e	11' 2" e	15' 9" a	12' 10" a	9' 7" a	15' 10" e	13' 8" e	11' 2" e	15' 9" a	12' 10" a	9' 7" a
1000S200-43	33	17' 1" e	14' 9" e	12' 1" e	16' 6" a	13' 5" a	9' 11" a	17' 1" e	14' 9" e	12' 1" e	16' 6" a	13' 5" a	9' 11" a
1000S250-43	33	17' 6" e	15' 2" e	12' 5" e	16' 9" a	13' 7" a	10' 1" a	17' 6" e	15' 2" e	12' 5" e	16' 9" a	13' 7" a	10' 1" a
1000S162-54	50	20' 2"	18' 4"	15' 0" e	21' 2" i	18' 4" i	15' 0" i	18' 4"	16' 8"	14' 7" e	20' 7" i	18' 4" i	15' 0" i
1000S200-54	50	21' 1"	19' 2"	16' 1" e	22' 9" i	19' 9" i	15' 10" i	19' 2"	17' 5"	15' 3" e	21' 6" i	19' 7" i	15' 10" i
1000S250-54	50	22' 3"	20' 3"	16' 6" e	23' 5" i	20' 3" i	16' 1" i	20' 3"	18' 5"	16' 1" e	22' 9" i	20' 3" i	16' 1" i
1000S162-68	50	21' 11"	19' 11"	17' 4"	24' 7" i	21' 8" i	17' 8" i	19' 11"	18' 1"	15' 9"	22' 4" i	20' 3" i	17' 8" i
1000S200-68	50	22' 10"	20' 9"	18' 2"	25' 8" i	23' 2" i	18' 11" i	20' 9"	18' 10"	16' 6"	23' 4" i	21' 2" i	18' 6" i
1000S250-68	50	24' 0"	21' 9"	19' 0"	26' 11" i	23' 10" i	19' 6" i	21' 9"	19' 9"	17' 3"	24' 5" i	22' 3" i	19' 5" i
1000S162-97	50	24' 7"	22' 4"	19' 6"	27' 7"	25' 1"	21' 11" i	22' 4"	20' 3"	17' 9"	25' 1"	22' 9"	19' 11" i
1000S200-97	50	25' 8"	23' 4"	20' 4"	28' 10"	26' 2"	22' 10" i	23' 4"	21' 2"	18' 6"	26' 2"	23' 9"	20' 9" i
1000S250-97	50	26' 9"	24' 3"	21' 3"	30' 0"	27' 3"	23' 10" i	24' 3"	22' 1"	19' 3"	27' 3"	24' 9"	21' 8" i
1000S162-118	50	26' 0"	23' 8"	20' 8"	29' 3"	26' 7"	23' 2"	23' 8"	21' 6"	18' 9"	26' 7"	24' 1"	21' 1"
1000S200-118	50	27' 3"	24' 9"	21' 7"	30' 7"	27' 9"	24' 3"	24' 9"	22' 6"	19' 7"	27' 9"	25' 3"	22' 0"
1000S250-118	50	28' 4"	25' 9"	22' 6"	31' 10"	28' 11"	25' 3"	25' 9"	23' 5"	20' 5"	28' 11"	26' 3"	22' 11"

See Allowable Floor Joist Span Table Notes on page 62.

Floor Joist Span Tables

SFIA
STEEL FRAMING INDUSTRY ASSOCIATION

10 psf Dead Load and 50 psf Live Load

		Live Load Deflection L/360						Live Load Deflection L/480					
		Single Span			Two Equal Spans			Single Span			Two Equal Spans		
		Spacing (in) o.c.			Spacing (in) o.c.			Spacing (in) o.c.			Spacing (in) o.c.		
Member	Fy (ksi)	12	16	24	12	16	24	12	16	24	12	16	24
1200S162-54	50	22' 10" e	19' 9" e	16' 1" e	22' 10" a	19' 6" a	14' 8" a	21' 1" e	19' 2" e	16' 1" e	22' 10" a	19' 6" a	14' 8" a
1200S200-54	50	24' 3" e	21' 4" e	17' 5" e	24' 8" a	20' 6" a	15' 4" a	22' 0" e	20' 0" e	17' 5" e	24' 8" a	20' 6" a	15' 4" a
1200S250-54	50	25' 3" e	22' 1" e	18' 0" e	25' 6" a	20' 11" a	15' 7" a	22' 11" e	20' 10" e	18' 0" e	25' 6" a	20' 11" a	15' 7" a
1200S162-68	50	25' 3"	22' 11"	19' 2"	27' 1" i	23' 6" i	19' 2" i	22' 11"	20' 10"	18' 2"	25' 9" i	23' 5" i	19' 2" i
1200S200-68	50	26' 4"	23' 11"	20' 8" e	29' 2" i	25' 3" i	20' 8" i	23' 11"	21' 9"	19' 0"	26' 10" i	24' 5" i	20' 8" i
1200S250-68	50	27' 5"	24' 11"	21' 4" e	30' 1" i	26' 1" i	21' 4" i	24' 11"	22' 8"	19' 9"	28' 0" i	25' 5" i	21' 4" i
1200S162-97	50	28' 7"	26' 0"	22' 8"	32' 1"	29' 2" i	24' 11" i	26' 0"	23' 7"	20' 7"	29' 2"	26' 6"	23' 2" i
1200S200-97	50	29' 9"	27' 1"	23' 8"	33' 5"	30' 4" i	26' 6" i	27' 1"	24' 7"	21' 6"	30' 4"	27' 7"	24' 1" i
1200S250-97	50	30' 11"	28' 1"	24' 7"	34' 9"	31' 7" i	27' 5" i	28' 1"	25' 6"	22' 4"	31' 7"	28' 8"	25' 0" i
1200S162-118	50	30' 5"	27' 7"	24' 2"	34' 2"	31' 0"	27' 1" i	27' 7"	25' 1"	21' 11"	31' 0"	28' 2"	24' 7"
1200S200-118	50	31' 8"	28' 9"	25' 2"	35' 7"	32' 4"	28' 3" i	28' 9"	26' 2"	22' 10"	32' 4"	29' 4"	25' 8"
1200S250-118	50	32' 11"	29' 11"	26' 1"	36' 11"	33' 7"	29' 4" i	29' 11"	27' 2"	23' 9"	33' 7"	30' 6"	26' 8"
1200S300-118	50	33' 11"	30' 10"	26' 11"	38' 1"	34' 7"	30' 3" i	30' 10"	28' 0"	24' 6"	34' 7"	31' 5"	27' 6"
1200S350-118	50	35' 8"	32' 5"	28' 4"	40' 1"	36' 5"	31' 10" i	32' 5"	29' 6"	25' 9"	36' 5"	33' 1"	28' 11"
1400S200-54	50	26' 2" e	22' 8" e	18' 6" e	24' 5" a	19' 10" a	14' 7" a	24' 9" e	22' 6" e	18' 6" e	24' 5" a	19' 10" a	14' 7" a
1400S250-54	50	27' 2" e	23' 7" e	19' 3" e	24' 11" a	20' 2" a	14' 10" a	25' 9" e	23' 5" e	19' 3" e	24' 11" a	20' 2" a	14' 10" a
1400S300-54	50	27' 10" e	24' 2" e	19' 7" e	25' 3" a	20' 5" a	14' 11" a	26' 2" e	23' 9" e	19' 7" e	25' 3" a	20' 5" a	14' 11" a
1400S350-54	50	30' 9" e	27' 1" e	19' 7" e	26' 10" a	21' 7" a	15' 8" a	27' 11" e	25' 5" e	19' 7" e	26' 10" a	21' 7" a	15' 8" a
1400S200-68	50	29' 8"	26' 11"	22' 0" e	31' 1" i	26' 11" i	22' 0" i	26' 11"	24' 6"	21' 5" e	30' 3" i	26' 11" i	22' 0" i
1400S250-68	50	30' 10"	28' 0"	22' 10" e	32' 3" i	28' 0" i	22' 6" i	28' 0"	25' 6"	22' 3" e	31' 6" i	28' 0" i	22' 6" i
1400S300-68	50	31' 8"	28' 7"	23' 4" e	33' 1" i	28' 7" i	22' 10" i	28' 9"	26' 2"	22' 10" e	32' 4" i	28' 7" i	22' 10" i
1400S350-68	50	33' 11"	30' 10" e	26' 1" e	36' 11" i	31' 11" i	24' 5" a	30' 10"	28' 0"	24' 6" e	34' 7" i	31' 5" i	24' 5" a
1400S200-97	50	33' 8"	30' 7"	26' 9"	37' 9" i	34' 4" i	28' 7" i	30' 7"	27' 9"	24' 3"	34' 4"	31' 2" i	27' 3" i
1400S250-97	50	34' 11"	31' 9"	27' 8"	39' 2" i	35' 7" i	29' 8" i	31' 9"	28' 10"	25' 2"	35' 7"	32' 4" i	28' 3" i
1400S300-97	50	36' 0"	32' 8"	28' 7"	40' 5" i	36' 8" i	30' 4" i	32' 8"	29' 8"	25' 11"	36' 8"	33' 4" i	29' 1" i
1400S350-97	50	37' 11"	34' 6"	30' 1"	42' 7" i	38' 8" i	33' 5" i	34' 6"	31' 4"	27' 4"	38' 8"	35' 2" i	30' 9" i
1400S200-118	50	36' 0"	32' 9"	28' 7"	40' 5"	36' 9" i	32' 1" i	32' 9"	29' 9"	26' 0"	36' 9"	33' 5"	29' 2" i
1400S250-118	50	37' 4"	33' 11"	29' 8"	41' 11"	38' 1" i	33' 3" i	33' 11"	30' 10"	26' 11"	38' 1"	34' 7"	30' 3" i
1400S300-118	50	38' 7"	35' 0"	30' 7"	43' 3"	39' 4" i	34' 4" i	35' 0"	31' 10"	27' 10"	39' 4"	35' 9"	31' 3" i
1400S350-118	50	40' 4"	36' 8"	32' 0"	45' 4"	41' 2"	36' 0" i	36' 8"	33' 4"	29' 1"	41' 2"	37' 5"	32' 8" i
1600S200-68	50	32' 9" e	28' 4" e	23' 2" e	32' 9" a	28' 4" a	21' 6" a	29' 10" e	27' 1" e	23' 2" e	32' 9" a	28' 4" a	21' 6" a
1600S250-68	50	34' 1" e	29' 6" e	24' 1" e	34' 1" a	29' 3" a	22' 0" a	31' 0" e	28' 2" e	24' 1" e	34' 1" a	29' 3" a	22' 0" a
1600S300-68	50	35' 0" e	30' 4" e	24' 9" e	35' 1" a	29' 9" a	22' 4" a	31' 10" e	28' 11" e	24' 9" e	35' 1" a	29' 9" a	22' 4" a
1600S350-68	50	36' 11" e	33' 6" e	27' 10" e	39' 0" a	31' 10" a	23' 8" a	33' 6" e	30' 5" e	26' 7" e	37' 8" a	31' 10" a	23' 8" a
1600S200-97	50	37' 5"	34' 0"	29' 8"	42' 0" i	37' 1" i	30' 3" i	34' 0"	30' 11"	27' 0"	38' 2" i	34' 8" i	30' 3" i
1600S250-97	50	38' 9"	35' 3"	30' 9"	43' 6" i	38' 7" i	31' 6" i	35' 3"	32' 0"	27' 11"	39' 6" i	35' 11" i	31' 5" i
1600S300-97	50	39' 11"	36' 3"	31' 8"	44' 10" i	39' 8" i	32' 4" i	36' 3"	32' 11"	28' 9"	40' 8" i	37' 0" i	32' 4" i
1600S350-97	50	41' 10"	38' 0"	33' 2"	46' 11" i	42' 8" i	35' 9" i	38' 0"	34' 6"	30' 2"	42' 8" i	38' 9" i	33' 10" i
1600S200-118	50	40' 2"	36' 6"	31' 10"	45' 1"	41' 0" i	35' 1" i	36' 6"	33' 2"	29' 0"	41' 0"	37' 3"	32' 6" i
1600S250-118	50	41' 6"	37' 9"	33' 0"	46' 7"	42' 4" i	36' 6" i	37' 9"	34' 3"	29' 11"	42' 4"	38' 6"	33' 7" i
1600S300-118	50	42' 10"	38' 11"	34' 0"	48' 1" i	43' 8" i	37' 6" i	38' 11"	35' 4"	30' 11"	43' 8"	39' 8"	34' 8" i
1600S350-118	50	44' 9"	40' 8"	35' 6"	50' 3"	45' 8" i	39' 11" i	40' 8"	36' 11"	32' 3"	45' 8"	41' 6"	36' 3" i

See Allowable Floor Joist Span Table Notes on page 62.

Floor Joist Span Tables

SFIA
STEEL FRAMING INDUSTRY ASSOCIATION

15 psf Dead Load and 125 psf Live Load

		Live Load Deflection L/360						Live Load Deflection L/480					
		Single Span			Two Equal Spans			Single Span			Two Equal Spans		
		Spacing (in) o.c.			Spacing (in) o.c.			Spacing (in) o.c.			Spacing (in) o.c.		
Member	Fy (ksi)	12	16	24	12	16	24	12	16	24	12	16	24
600S162-33	33	6' 9" e	5' 10" e	4' 7" e	6' 0" a	4' 10" a	3' 6" a	6' 9" e	5' 10" e	4' 7" e	6' 0" a	4' 10" a	3' 6" a
600S200-33	33	7' 2" e	6' 2" e	4' 7" e	6' 2" a	5' 0" a	3' 7" a	7' 2" e	6' 2" e	4' 7" e	6' 2" a	5' 0" a	3' 7" a
600S162-43	33	8' 4" e	7' 2" e	5' 10" e	8' 4" a	7' 2" a	5' 9" a	8' 4" e	7' 2" e	5' 10" e	8' 4" a	7' 2" a	5' 9" a
600S200-43	33	8' 7" e	7' 5" e	6' 1" e	8' 7" a	7' 5" a	5' 11" a	8' 7" e	7' 5" e	6' 1" e	8' 7" a	7' 5" a	5' 11" a
600S250-43	33	8' 9" e	7' 7" e	6' 3" e	8' 9" a	7' 7" a	6' 0" a	8' 9" e	7' 7" e	6' 3" e	8' 9" a	7' 7" a	6' 0" a
600S162-54	50	10' 0"	9' 1"	7' 10" e	11' 1" i	9' 7" i	7' 10" a	9' 1"	8' 3"	7' 3" e	10' 2" i	9' 3" i	7' 10" a
600S200-54	50	10' 6"	9' 7"	8' 1" e	11' 5" i	9' 11" i	8' 1" a	9' 7"	8' 8"	7' 7" e	10' 9" i	9' 9" i	8' 1" a
600S250-54	50	11' 0"	9' 11" e	8' 3" e	11' 8" i	10' 2" i	8' 3" a	9' 11"	9' 1"	7' 11" e	11' 2" i	10' 2" i	8' 3" a
600S162-68	50	10' 9"	9' 9"	8' 6"	12' 0" i	10' 11" i	9' 3" i	9' 9"	8' 10"	7' 9"	10' 11" i	9' 11" i	8' 8" i
600S200-68	50	11' 3"	10' 3"	8' 11"	12' 8" i	11' 6" i	9' 9" i	10' 3"	9' 4"	8' 2"	11' 6" i	10' 5" i	9' 2" i
600S250-68	50	11' 10"	10' 9"	9' 5"	13' 3" i	11' 10" i	9' 8" i	10' 9"	9' 9"	8' 6"	12' 1" i	10' 11" i	9' 7" i
600S162-97	50	11' 11"	10' 10"	9' 5"	13' 4"	12' 1"	10' 7" i	10' 10"	9' 10"	8' 7"	12' 1"	11' 0"	9' 7" i
600S200-97	50	12' 6"	11' 4"	9' 11"	14' 1"	12' 9"	11' 2" i	11' 4"	10' 4"	9' 0"	12' 9"	11' 7"	10' 2" i
600S250-97	50	13' 2"	11' 11"	10' 5"	14' 9"	13' 5" i	11' 9" i	11' 11"	10' 10"	9' 6"	13' 5"	12' 2"	10' 8" i
600S162-118	50	12' 7"	11' 5"	10' 0"	14' 1"	12' 10"	11' 2"	11' 5"	10' 4"	9' 1"	12' 10"	11' 8"	10' 2"
600S200-118	50	13' 3"	12' 0"	10' 6"	14' 10"	13' 6"	11' 10"	12' 0"	10' 11"	9' 7"	13' 6"	12' 3"	10' 9"
600S250-118	50	13' 11"	12' 8"	11' 1"	15' 8"	14' 2"	12' 5"	12' 8"	11' 6"	10' 0"	14' 2"	12' 11"	11' 3"
800S162-33	33	6' 9" e	5' 1" e	3' 5" e	5' 5" a	4' 1" a	2' 8" a	6' 9" e	5' 1" e	3' 5" e	5' 5" a	4' 1" a	2' 8" a
800S200-33	33	6' 9" e	5' 1" e	3' 5" e	5' 5" a	4' 1" a	2' 8" a	6' 9" e	5' 1" e	3' 5" e	5' 5" a	4' 1" a	2' 8" a
800S162-43	33	9' 4" e	8' 1" e	6' 7" e	9' 0" a	7' 4" a	5' 5" a	9' 4" e	8' 1" e	6' 7" e	9' 0" a	7' 4" a	5' 5" a
800S200-43	33	10' 0" e	8' 8" e	7' 1" e	9' 4" a	7' 6" a	5' 7" a	10' 0" e	8' 8" e	7' 1" e	9' 4" a	7' 6" a	5' 7" a
800S250-43	33	10' 3" e	8' 11" e	7' 3" e	9' 6" a	7' 8" a	5' 8" a	10' 3" e	8' 11" e	7' 3" e	9' 6" a	7' 8" a	5' 8" a
800S162-54	50	12' 6" e	10' 10" e	8' 10" e	12' 6" i	10' 10" i	8' 8" a	11' 4"	10' 4" e	8' 10" e	12' 6" i	10' 10" i	8' 8" a
800S200-54	50	13' 2" e	11' 7" e	9' 5" e	13' 4" i	11' 7" a	9' 0" a	12' 0"	10' 11" e	9' 5" e	13' 4" i	11' 7" a	9' 0" a
800S250-54	50	13' 8" e	11' 10" e	9' 8" e	13' 8" i	11' 10" a	9' 1" a	12' 6"	11' 4" e	9' 8" e	13' 8" i	11' 10" a	9' 1" a
800S162-68	50	13' 6"	12' 3"	10' 4" e	14' 8" i	12' 8" i	10' 4" i	12' 3"	11' 2"	9' 9" e	13' 10" i	12' 6" i	10' 4" i
800S200-68	50	14' 2"	12' 11"	11' 3" e	15' 11" i	14' 0" i	11' 5" a	12' 11"	11' 8"	10' 3" e	14' 5" i	13' 2" i	11' 5" a
800S250-68	50	14' 9"	13' 5"	11' 4" e	16' 0" i	13' 10" i	11' 4" a	13' 5"	12' 2"	10' 8" e	15' 1" i	13' 8" i	11' 4" a
800S162-97	50	15' 0"	13' 8"	11' 11"	16' 11" i	15' 4" i	13' 1" i	13' 8"	12' 5"	10' 10"	15' 4"	13' 11" i	12' 2" i
800S200-97	50	15' 9"	14' 4"	12' 6"	17' 8" i	16' 1" i	14' 1" i	14' 4"	13' 0"	11' 4"	16' 1"	14' 7" i	12' 9" i
800S250-97	50	16' 6"	15' 0"	13' 1"	18' 6" i	16' 10" i	14' 8" i	15' 0"	13' 7"	11' 11"	16' 10"	15' 3" i	13' 4" i
800S162-118	50	15' 11"	14' 5"	12' 7"	17' 10"	16' 3"	14' 2" i	14' 5"	13' 2"	11' 6"	16' 3"	14' 9"	12' 11"
800S200-118	50	16' 8"	15' 2"	13' 3"	18' 9"	17' 0"	14' 11" i	15' 2"	13' 9"	12' 0"	17' 0"	15' 6"	13' 6"
800S250-118	50	17' 6"	15' 10"	13' 10"	19' 7"	17' 10"	15' 7" i	15' 10"	14' 5"	12' 7"	17' 10"	16' 2"	14' 2" i
1000S162-43	33	10' 4" e	8' 11" e	6' 0" e	8' 6" a	6' 9" a	4' 9" a	10' 4" e	8' 11" e	6' 0" e	8' 6" a	6' 9" a	4' 9" a
1000S200-43	33	11' 2" e	8' 11" e	6' 0" e	8' 10" a	7' 0" a	4' 9" a	11' 2" e	8' 11" e	6' 0" e	8' 10" a	7' 0" a	4' 9" a
1000S250-43	33	11' 6" e	8' 11" e	6' 0" e	8' 11" a	7' 1" a	4' 9" a	11' 6" e	8' 11" e	6' 0" e	8' 11" a	7' 1" a	4' 9" a
1000S162-54	50	13' 10" e	12' 0" e	9' 10" e	13' 7" i	11' 2" a	8' 3" a	13' 6" e	12' 0" e	9' 10" e	13' 7" i	11' 2" a	8' 3" a
1000S200-54	50	14' 11" e	12' 11" e	10' 6" e	14' 3" a	11' 7" a	8' 6" a	14' 2" e	12' 10" e	10' 6" e	14' 3" a	11' 7" a	8' 6" a
1000S250-54	50	15' 4" e	13' 3" e	10' 10" e	14' 6" a	11' 9" a	8' 8" a	14' 11" e	13' 3" e	10' 10" e	14' 6" a	11' 9" a	8' 8" a
1000S162-68	50	16' 1"	14' 2" e	11' 7" e	16' 5" i	14' 2" i	11' 7" a	14' 8"	13' 4"	11' 7" e	16' 5" i	14' 2" i	11' 7" a
1000S200-68	50	16' 10"	15' 2" e	12' 5" e	17' 6" i	15' 2" i	12' 5" a	15' 4"	13' 11" e	12' 2" e	17' 2" i	15' 2" i	12' 5" a
1000S250-68	50	17' 8"	15' 7" e	12' 9" e	18' 0" i	15' 7" i	12' 9" a	16' 0"	14' 7" e	12' 9" e	18' 0" i	15' 7" i	12' 9" a
1000S162-97	50	18' 1"	16' 5"	14' 4"	20' 4" i	18' 2" i	14' 10" i	16' 5"	14' 11"	13' 1"	18' 6" i	16' 9" i	14' 8" i
1000S200-97	50	18' 11"	17' 2"	15' 0"	21' 3" i	19' 3" i	15' 10" i	17' 2"	15' 7"	13' 8"	19' 3" i	17' 6" i	15' 4" i
1000S250-97	50	19' 8"	17' 11"	15' 8"	22' 1" i	20' 1" i	16' 11" i	17' 11"	16' 3"	14' 2"	20' 1" i	18' 3" i	15' 11" i
1000S162-118	50	19' 2"	17' 5"	15' 3"	21' 6" i	19' 7" i	16' 11" i	17' 5"	15' 10"	13' 10"	19' 7"	17' 9"	15' 6" i
1000S200-118	50	20' 1"	18' 3"	15' 11"	22' 6"	20' 5" i	17' 10" i	18' 3"	16' 7"	14' 6"	20' 5"	18' 7"	16' 3" i
1000S250-118	50	20' 11"	19' 0"	16' 7"	23' 5"	21' 4" i	18' 7" i	19' 0"	17' 3"	15' 1"	21' 4"	19' 4"	16' 11" i

See Allowable Floor Joist Span Table Notes on page 62.

Floor Joist Span Tables

SFIA
STEEL FRAMING INDUSTRY ASSOCIATION

15 psf Dead Load and 125 psf Live Load

		Live Load Deflection L/360						Live Load Deflection L/480					
		Single Span			Two Equal Spans			Single Span			Two Equal Spans		
		Spacing (in) o.c.			Spacing (in) o.c.			Spacing (in) o.c.			Spacing (in) o.c.		
Member	Fy (ksi)	12	16	24	12	16	24	12	16	24	12	16	24
1200S162-54	50	14' 11" e	12' 11" e	9' 10" e	13' 2" a	10' 7" a	7' 8" a	14' 11" e	12' 11" e	9' 10" e	13' 2" a	10' 7" a	7' 8" a
1200S200-54	50	16' 2" e	14' 0" e	9' 10" e	13' 8" a	11' 0" a	7' 10" a	16' 2" e	14' 0" e	9' 10" e	13' 8" a	11' 0" a	7' 10" a
1200S250-54	50	16' 8" e	14' 5" e	9' 10" e	13' 10" a	11' 1" a	7' 10" a	16' 8" e	14' 5" e	9' 10" e	13' 10" a	11' 1" a	7' 10" a
1200S162-68	50	17' 9" e	15' 4" e	12' 7" e	17' 9" i	15' 4" i	11' 11" a	16' 11"	15' 4" e	12' 7" e	17' 9" i	15' 4" i	11' 11" a
1200S200-68	50	19' 1" e	16' 6" e	13' 6" e	19' 1" i	16' 6" a	12' 6" a	17' 7"	16' 0" e	13' 6" e	19' 1" i	16' 6" a	12' 6" a
1200S250-68	50	19' 9" e	17' 1" e	13' 11" e	19' 9" i	16' 10" a	12' 8" a	18' 4" e	16' 8" e	13' 11" e	19' 9" i	16' 10" a	12' 8" a
1200S162-97	50	21' 1"	19' 2"	16' 3"	23' 0" i	19' 11" i	16' 3" i	19' 2"	17' 5"	15' 2"	21' 6" i	19' 6" i	16' 3" i
1200S200-97	50	21' 11"	19' 11"	17' 5" e	24' 7" i	21' 4" i	17' 5" i	19' 11"	18' 1"	15' 10"	22' 4" i	20' 4" i	17' 5" i
1200S250-97	50	22' 9"	20' 8"	18' 0" e	25' 5" i	22' 0" i	18' 0" i	20' 8"	18' 10"	16' 5"	23' 3" i	21' 1" i	18' 0" i
1200S162-118	50	22' 5"	20' 4"	17' 9"	25' 2" i	22' 10" i	18' 9" i	20' 4"	18' 6"	16' 2"	22' 10"	20' 9" i	18' 2" i
1200S200-118	50	23' 4"	21' 2"	18' 6"	26' 2" i	23' 10" i	19' 11" i	21' 2"	19' 3"	16' 10"	23' 10"	21' 8" i	18' 11" i
1200S250-118	50	24' 3"	22' 0"	19' 3"	27' 3" i	24' 9" i	20' 8" i	22' 0"	20' 0"	17' 6"	24' 9"	22' 6" i	19' 7" i
1200S300-118	50	25' 0"	22' 9"	19' 10"	28' 1" i	25' 6" i	21' 11" i	22' 9"	20' 8"	18' 0"	25' 6"	23' 2" i	20' 3" i
1200S350-118	50	26' 4"	23' 11"	20' 10"	29' 6" i	26' 10" i	23' 5" i	23' 11"	21' 8"	19' 0"	26' 10"	24' 4" i	21' 3" i
1400S200-54	50	16' 10" e	12' 7" e	8' 5" e	12' 11" a	10' 1" a	6' 9" a	16' 10" e	12' 7" e	8' 5" e	12' 11" a	10' 1" a	6' 9" a
1400S250-54	50	16' 10" e	12' 7" e	8' 5" e	13' 1" a	10' 1" a	6' 9" a	16' 10" e	12' 7" e	8' 5" e	13' 1" a	10' 1" a	6' 9" a
1400S300-54	50	16' 10" e	12' 7" e	8' 5" e	13' 2" a	10' 1" a	6' 9" a	16' 10" e	12' 7" e	8' 5" e	13' 2" a	10' 1" a	6' 9" a
1400S350-54	50	16' 10" e	12' 7" e	8' 5" e	13' 5" a	10' 1" a	6' 9" a	16' 10" e	12' 7" e	8' 5" e	13' 5" a	10' 1" a	6' 9" a
1400S200-68	50	20' 4" e	17' 8" e	14' 5" e	19' 9" i	16' 2" a	12' 0" a	19' 10" e	17' 8" e	14' 5" e	19' 9" i	16' 2" a	12' 0" a
1400S250-68	50	21' 2" e	18' 4" e	14' 11" e	20' 3" a	16' 6" a	12' 2" a	20' 8" e	18' 4" e	14' 11" e	20' 3" a	16' 6" a	12' 2" a
1400S300-68	50	21' 8" e	18' 9" e	15' 4" e	20' 6" a	16' 8" a	12' 4" a	21' 2" e	18' 9" e	15' 4" e	20' 6" a	16' 8" a	12' 4" a
1400S350-68	50	24' 2" e	20' 11" e	16' 11" e	21' 10" a	17' 8" a	12' 11" a	22' 9" e	20' 8" e	16' 11" e	21' 10" a	17' 8" a	12' 11" a
1400S200-97	50	24' 10"	22' 6"	18' 9" e	26' 6" i	22' 11" i	18' 9" i	22' 6"	20' 6"	17' 11" e	25' 4" i	22' 11" i	18' 9" i
1400S250-97	50	25' 9"	23' 4"	19' 5" e	27' 5" i	23' 9" i	19' 5" a	23' 4"	21' 3"	18' 7" e	26' 3" i	23' 9" i	19' 5" a
1400S300-97	50	26' 6"	24' 1"	19' 10" e	28' 1" i	24' 4" i	19' 10" a	24' 1"	21' 11"	19' 1" e	27' 0" i	24' 4" i	19' 10" a
1400S350-97	50	28' 0"	25' 5" e	21' 11" e	31' 0" i	26' 10" i	21' 11" a	25' 5"	23' 1"	20' 2" e	28' 6" i	25' 11" i	21' 11" a
1400S200-118	50	26' 7"	24' 1"	21' 1"	29' 10" i	26' 5" i	21' 7" i	24' 1"	21' 11"	19' 2"	27' 1" i	24' 7" i	21' 6" i
1400S250-118	50	27' 6"	25' 0"	21' 10"	30' 11" i	27' 5" i	22' 5" i	25' 0"	22' 8"	19' 10"	28' 1" i	25' 6" i	22' 3" i
1400S300-118	50	28' 5"	25' 10"	22' 7"	31' 11" i	28' 1" i	22' 11" i	25' 10"	23' 5"	20' 6"	29' 0" i	26' 4" i	22' 11" i
1400S350-118	50	29' 9"	27' 0"	23' 7"	33' 5" i	30' 4" i	25' 11" i	27' 0"	24' 7"	21' 5"	30' 4" i	27' 7" i	24' 1" i
1600S200-68	50	21' 5" e	18' 7" e	14' 9" e	19' 3" a	15' 6" a	11' 4" a	21' 5" e	18' 7" e	14' 9" e	19' 3" a	15' 6" a	11' 4" a
1600S250-68	50	22' 4" e	19' 4" e	14' 9" e	19' 8" a	15' 10" a	11' 6" a	22' 4" e	19' 4" e	14' 9" e	19' 8" a	15' 10" a	11' 6" a
1600S300-68	50	22' 11" e	19' 10" e	14' 9" e	19' 11" a	16' 1" a	11' 8" a	22' 11" e	19' 10" e	14' 9" e	19' 11" a	16' 1" a	11' 8" a
1600S350-68	50	25' 9" e	22' 1" e	14' 9" e	21' 1" a	16' 11" a	11' 9" a	24' 8" e	22' 1" e	14' 9" e	21' 1" a	16' 11" a	11' 9" a
1600S200-97	50	27' 7"	24' 3" e	19' 10" e	28' 0" i	24' 3" i	19' 10" a	25' 1"	22' 9"	19' 10" e	28' 0" i	24' 3" i	19' 10" a
1600S250-97	50	28' 7"	25' 3" e	20' 8" e	29' 2" i	25' 3" i	20' 8" a	25' 11"	23' 7"	20' 7" e	29' 2" i	25' 3" i	20' 8" a
1600S300-97	50	29' 5"	25' 11" e	21' 2" e	29' 11" i	25' 11" i	21' 2" a	26' 9"	24' 3" e	21' 2" e	29' 11" i	25' 11" i	21' 2" a
1600S350-97	50	30' 10"	28' 0" e	23' 5" e	33' 2" i	28' 8" a	23' 5" a	28' 0"	25' 5" e	22' 3" e	31' 5" i	28' 7" a	23' 5" a
1600S200-118	50	29' 7"	26' 11"	23' 0"	32' 6" i	28' 2" i	23' 0" i	26' 11"	24' 5"	21' 4"	30' 2" i	27' 5" i	23' 0" i
1600S250-118	50	30' 7"	27' 10"	23' 11" e	33' 10" i	29' 3" i	23' 11" i	27' 10"	25' 3"	22' 1"	31' 3" i	28' 4" i	23' 11" i
1600S300-118	50	31' 7"	28' 8"	24' 7" e	34' 9" i	30' 1" i	24' 7" i	28' 8"	26' 1"	22' 9"	32' 2" i	29' 3" i	24' 7" i
1600S350-118	50	33' 0"	30' 0"	26' 2" e	37' 0" i	33' 0" i	26' 11" a	30' 0"	27' 3"	23' 9" e	33' 8" i	30' 7" i	26' 8" i

See Allowable Floor Joist Span Table Notes on page 62.

Floor Joist Span Tables

SFIA
STEEL FRAMING INDUSTRY ASSOCIATION

40 psf Dead Load and 125 psf Live Load

		Live Load Deflection L/360						Live Load Deflection L/480					
		Single Span			Two Equal Spans			Single Span			Two Equal Spans		
		Spacing (in) o.c.			Spacing (in) o.c.			Spacing (in) o.c.			Spacing (in) o.c.		
Member	Fy (ksi)	12	16	24	12	16	24	12	16	24	12	16	24
600S162-33	33	6' 2" e	5' 4" e	3' 10" e	5' 3" a	4' 3" a	3' 1" a	6' 2" e	5' 4" e	3' 10" e	5' 3" a	4' 3" a	3' 1" a
600S200-33	33	6' 7" e	5' 9" e	3' 10" e	5' 6" a	4' 4" a	3' 1" a	6' 7" e	5' 9" e	3' 10" e	5' 6" a	4' 4" a	3' 1" a
600S162-43	33	7' 8" e	6' 7" e	5' 5" e	7' 8" a	6' 7" a	5' 2" a	7' 8" e	6' 7" e	5' 5" e	7' 8" a	6' 7" a	5' 2" a
600S200-43	33	7' 11" e	6' 10" e	5' 7" e	7' 11" a	6' 10" a	5' 3" a	7' 11" e	6' 10" e	5' 7" e	7' 11" a	6' 10" a	5' 3" a
600S250-43	33	8' 1" e	7' 0" e	5' 9" e	8' 1" a	7' 0" a	5' 4" a	8' 1" e	7' 0" e	5' 9" e	8' 1" a	7' 0" a	5' 4" a
600S162-54	50	10' 0"	8' 10" e	7' 3" e	10' 3" i	8' 10" i	7' 3" a	9' 1"	8' 3"	7' 3" e	10' 2" i	8' 10" i	7' 3" a
600S200-54	50	10' 6"	9' 1" e	7' 5" e	10' 6" i	9' 1" i	7' 5" a	9' 7"	8' 8" e	7' 5" e	10' 6" i	9' 1" i	7' 5" a
600S250-54	50	10' 9"	9' 4" e	7' 7" e	10' 9" i	9' 4" i	7' 7" a	9' 11"	9' 1" e	7' 7" e	10' 9" i	9' 4" i	7' 7" a
600S162-68	50	10' 9"	9' 9"	8' 6" e	12' 0" i	10' 5" i	8' 6" i	9' 9"	8' 10"	7' 9"	10' 11" i	9' 11" i	8' 6" i
600S200-68	50	11' 3"	10' 3"	8' 11" e	12' 8" i	11' 0" i	8' 11" i	10' 3"	9' 4"	8' 2"	11' 6" i	10' 5" i	8' 11" i
600S250-68	50	11' 10"	10' 9"	8' 11" e	12' 7" i	10' 11" i	8' 11" i	10' 9"	9' 9"	8' 6" e	12' 1" i	10' 11" i	8' 11" i
600S162-97	50	11' 11"	10' 10"	9' 5"	13' 4"	12' 1" i	10' 7" i	10' 10"	9' 10"	8' 7"	12' 1"	11' 0"	9' 7" i
600S200-97	50	12' 6"	11' 4"	9' 11"	14' 1" i	12' 9" i	11' 2" i	11' 4"	10' 4"	9' 0"	12' 9"	11' 7"	10' 2" i
600S250-97	50	13' 2"	11' 11"	10' 5"	14' 9" i	13' 5" i	11' 7" i	11' 11"	10' 10"	9' 6"	13' 5"	12' 2" i	10' 8" i
600S162-118	50	12' 7"	11' 5"	10' 0"	14' 1"	12' 10"	11' 2" i	11' 5"	10' 4"	9' 1"	12' 10"	11' 8"	10' 2"
600S200-118	50	13' 3"	12' 0"	10' 6"	14' 10"	13' 6"	11' 10" i	12' 0"	10' 11"	9' 7"	13' 6"	12' 3"	10' 9"
600S250-118	50	13' 11"	12' 8"	11' 1"	15' 8"	14' 2"	12' 5" i	12' 8"	11' 6"	10' 0"	14' 2"	12' 11"	11' 3" i
800S162-33	33	5' 9" e	4' 4" e	2' 10" e	4' 7" a	3' 5" a	2' 4" a	5' 9" e	4' 4" e	2' 10" e	4' 7" a	3' 5" a	2' 4" a
800S200-33	33	5' 9" e	4' 4" e	2' 10" e	4' 7" a	3' 5" a	2' 4" a	5' 9" e	4' 4" e	2' 10" e	4' 7" a	3' 5" a	2' 4" a
800S162-43	33	8' 7" e	7' 5" e	6' 1" e	8' 0" a	6' 5" a	4' 9" a	8' 7" e	7' 5" e	6' 1" e	8' 0" a	6' 5" a	4' 9" a
800S200-43	33	9' 3" e	8' 0" e	6' 4" e	8' 3" a	6' 8" a	4' 11" a	9' 3" e	8' 0" e	6' 4" e	8' 3" a	6' 8" a	4' 11" a
800S250-43	33	9' 5" e	8' 2" e	6' 4" e	8' 5" a	6' 9" a	4' 11" a	9' 5" e	8' 2" e	6' 4" e	8' 5" a	6' 9" a	4' 11" a
800S162-54	50	11' 6" e	10' 0" e	8' 2" e	11' 6" i	10' 0" a	7' 8" a	11' 4" e	10' 0" e	8' 2" e	11' 6" i	10' 0" a	7' 8" a
800S200-54	50	12' 3" e	10' 8" e	8' 8" e	12' 3" i	10' 8" a	8' 0" a	12' 0" e	10' 8" e	8' 8" e	12' 3" i	10' 8" a	8' 0" a
800S250-54	50	12' 7" e	10' 11" e	8' 11" e	12' 7" a	10' 9" a	8' 1" a	12' 6" e	10' 11" e	8' 11" e	12' 7" a	10' 9" a	8' 1" a
800S162-68	50	13' 6"	11' 8"	9' 7" e	13' 6" i	11' 8" i	9' 7" a	12' 3"	11' 2"	9' 7" e	13' 6" i	11' 8" i	9' 7" a
800S200-68	50	14' 2"	12' 11" e	10' 6" e	14' 10" i	12' 11" i	10' 6" a	12' 11"	11' 8"	10' 3" e	14' 5" i	12' 11" i	10' 6" a
800S250-68	50	14' 9"	12' 9" e	10' 5" e	14' 9" i	12' 9" i	10' 5" a	13' 5"	12' 2" e	10' 5" e	14' 9" i	12' 9" i	10' 5" a
800S162-97	50	15' 0"	13' 8"	11' 11"	16' 11" i	14' 9" i	12' 1" i	13' 8"	12' 5"	10' 10"	15' 4" i	13' 11" i	12' 1" i
800S200-97	50	15' 9"	14' 4"	12' 6"	17' 8" i	16' 1" i	13' 6" i	14' 4"	13' 0"	11' 4"	16' 1" i	14' 7" i	12' 9" i
800S250-97	50	16' 6"	15' 0"	13' 1"	18' 6" i	16' 10" i	13' 9" i	15' 0"	13' 7"	11' 11"	16' 10" i	15' 3" i	13' 4" i
800S162-118	50	15' 11"	14' 5"	12' 7"	17' 10"	16' 3" i	14' 2" i	14' 5"	13' 2"	11' 6"	16' 3"	14' 9"	12' 11" i
800S200-118	50	16' 8"	15' 2"	13' 3"	18' 9"	17' 0" i	14' 11" i	15' 2"	13' 9"	12' 0"	17' 0"	15' 6"	13' 6" i
800S250-118	50	17' 6"	15' 10"	13' 10"	19' 7"	17' 10" i	15' 7" i	15' 10"	14' 5"	12' 7"	17' 10"	16' 2"	14' 2" i
1000S162-43	33	9' 6" e	7' 7" e	5' 1" e	7' 6" a	5' 11" a	4' 1" a	9' 6" e	7' 7" e	5' 1" e	7' 6" a	5' 11" a	4' 1" a
1000S200-43	33	10' 2" e	7' 7" e	5' 1" e	7' 9" a	6' 1" a	4' 1" a	10' 2" e	7' 7" e	5' 1" e	7' 9" a	6' 1" a	4' 1" a
1000S250-43	33	10' 2" e	7' 7" e	5' 1" e	7' 10" a	6' 1" a	4' 1" a	10' 2" e	7' 7" e	5' 1" e	7' 10" a	6' 1" a	4' 1" a
1000S162-54	50	12' 9" e	11' 1" e	9' 0" e	12' 2" a	9' 11" a	7' 4" a	12' 9" e	11' 1" e	9' 0" e	12' 2" a	9' 11" a	7' 4" a
1000S200-54	50	13' 9" e	11' 11" e	9' 8" e	12' 8" a	10' 3" a	7' 6" a	13' 9" e	11' 11" e	9' 8" e	12' 8" a	10' 3" a	7' 6" a
1000S250-54	50	14' 1" e	12' 3" e	10' 0" e	12' 10" a	10' 5" a	7' 7" a	14' 1" e	12' 3" e	10' 0" e	12' 10" a	10' 5" a	7' 7" a
1000S162-68	50	15' 1"	13' 1" e	10' 8" e	15' 1" i	13' 1" i	10' 8" a	14' 8"	13' 1" e	10' 8" e	15' 1" i	13' 1" i	10' 8" a
1000S200-68	50	16' 2" e	14' 0" e	11' 5" e	16' 2" i	14' 0" a	11' 5" a	15' 4"	13' 11" e	11' 5" e	16' 2" i	14' 0" a	11' 5" a
1000S250-68	50	16' 7" e	14' 4" e	11' 9" e	16' 7" i	14' 4" a	11' 7" a	16' 0" e	14' 4" e	11' 9" e	16' 7" i	14' 4" a	11' 7" a
1000S162-97	50	18' 1"	16' 5"	13' 8"	19' 4" i	16' 9" i	13' 8" i	16' 5"	14' 11"	13' 1"	18' 6" i	16' 9" i	13' 8" i
1000S200-97	50	18' 11"	17' 2"	14' 7"	20' 7" i	17' 10" i	14' 7" i	17' 2"	15' 7"	13' 8"	19' 3" i	17' 6" i	14' 7" i
1000S250-97	50	19' 8"	17' 11"	15' 7" e	22' 0" i	19' 1" i	15' 7" i	17' 11"	16' 3"	14' 2"	20' 1" i	18' 3" i	15' 7" i
1000S162-118	50	19' 2"	17' 5"	15' 3"	21' 6" i	19' 1" i	15' 7" i	17' 5"	15' 10"	13' 10"	19' 7" i	17' 9" i	15' 6" i
1000S200-118	50	20' 1"	18' 3"	15' 11"	22' 6" i	20' 3" i	16' 7" i	18' 3"	16' 7"	14' 6"	20' 5" i	18' 7" i	16' 3" i
1000S250-118	50	20' 11"	19' 0"	16' 7"	23' 5" i	21' 4" i	18' 0" i	19' 0"	17' 3"	15' 1"	21' 4"	19' 4" i	16' 11" i

See Allowable Floor Joist Span Table Notes on page 62.

Floor Joist Span Tables

SFIA
STEEL FRAMING INDUSTRY ASSOCIATION

40 psf Dead Load and 125 psf Live Load

		Live Load Deflection L/360						Live Load Deflection L/480					
		Single Span			Two Equal Spans			Single Span			Two Equal Spans		
		Spacing (in) o.c.			Spacing (in) o.c.			Spacing (in) o.c.			Spacing (in) o.c.		
Member	Fy (ksi)	12	16	24	12	16	24	12	16	24	12	16	24
1200S162-54	50	13' 9" e	11' 11" e	8' 4" e	11' 7" a	9' 4" a	6' 8" a	13' 9" e	11' 11" e	8' 4" e	11' 7" a	9' 4" a	6' 8" a
1200S200-54	50	14' 11" e	12' 6" e	8' 4" e	12' 1" a	9' 8" a	6' 8" a	14' 11" e	12' 6" e	8' 4" e	12' 1" a	9' 8" a	6' 8" a
1200S250-54	50	15' 4" e	12' 6" e	8' 4" e	12' 3" a	9' 9" a	6' 8" a	15' 4" e	12' 6" e	8' 4" e	12' 3" a	9' 9" a	6' 8" a
1200S162-68	50	16' 4" e	14' 2" e	11' 7" e	16' 4" i	14' 1" a	10' 7" a	16' 4" e	14' 2" e	11' 7" e	16' 4" i	14' 1" a	10' 7" a
1200S200-68	50	17' 7" e	15' 3" e	12' 5" e	17' 7" i	14' 9" a	11' 1" a	17' 7" e	15' 3" e	12' 5" e	17' 7" i	14' 9" a	11' 1" a
1200S250-68	50	18' 2" e	15' 9" e	12' 10" e	18' 2" a	15' 1" a	11' 3" a	18' 2" e	15' 9" e	12' 10" e	18' 2" a	15' 1" a	11' 3" a
1200S162-97	50	21' 1"	18' 4"	15' 0" e	21' 3" i	18' 4" i	15' 0" i	19' 2"	17' 5"	15' 0" e	21' 3" i	18' 4" i	15' 0" i
1200S200-97	50	21' 11"	19' 7"	16' 0" e	22' 8" i	19' 7" i	16' 0" i	19' 11"	18' 1"	15' 10" e	22' 4" i	19' 7" i	16' 0" i
1200S250-97	50	22' 9"	20' 3"	16' 7" e	23' 5" i	20' 3" i	16' 7" i	20' 8"	18' 10"	16' 5" e	23' 3" i	20' 3" i	16' 7" i
1200S162-118	50	22' 5"	20' 4"	17' 3"	24' 5" i	21' 2" i	17' 3" i	20' 4"	18' 6"	16' 2"	22' 10" i	20' 9" i	17' 3" i
1200S200-118	50	23' 4"	21' 2"	18' 4"	26' 0" i	22' 6" i	18' 4" i	21' 2"	19' 3"	16' 10"	23' 10" i	21' 8" i	18' 4" i
1200S250-118	50	24' 3"	22' 0"	19' 0"	26' 10" i	23' 3" i	19' 0" i	22' 0"	20' 0"	17' 6"	24' 9" i	22' 6" i	19' 0" i
1200S300-118	50	25' 0"	22' 9"	19' 10"	28' 1" i	24' 9" i	20' 2" i	22' 9"	20' 8"	18' 0"	25' 6" i	23' 2" i	20' 2" i
1200S350-118	50	26' 4"	23' 11"	20' 10" e	29' 6" i	26' 10" i	22' 0" i	23' 11"	21' 8"	19' 0"	26' 10" i	24' 4" i	21' 3" i
1400S200-54	50	14' 3" e	10' 8" e	7' 2" e	11' 3" a	8' 7" a	5' 8" a	14' 3" e	10' 8" e	7' 2" e	11' 3" a	8' 7" a	5' 8" a
1400S250-54	50	14' 3" e	10' 8" e	7' 2" e	11' 5" a	8' 7" a	5' 8" a	14' 3" e	10' 8" e	7' 2" e	11' 5" a	8' 7" a	5' 8" a
1400S300-54	50	14' 3" e	10' 8" e	7' 2" e	11' 5" a	8' 7" a	5' 8" a	14' 3" e	10' 8" e	7' 2" e	11' 5" a	8' 7" a	5' 8" a
1400S350-54	50	14' 3" e	10' 8" e	7' 2" e	11' 5" a	8' 7" a	5' 8" a	14' 3" e	10' 8" e	7' 2" e	11' 5" a	8' 7" a	5' 8" a
1400S200-68	50	18' 9" e	16' 3" e	13' 3" e	17' 8" a	14' 4" a	10' 7" a	18' 9" e	16' 3" e	13' 3" e	17' 8" a	14' 4" a	10' 7" a
1400S250-68	50	19' 6" e	16' 10" e	13' 9" e	18' 0" a	14' 7" a	10' 9" a	19' 6" e	16' 10" e	13' 9" e	18' 0" a	14' 7" a	10' 9" a
1400S300-68	50	19' 11" e	17' 3" e	14' 1" e	18' 3" a	14' 9" a	10' 10" a	19' 11" e	17' 3" e	14' 1" e	18' 3" a	14' 9" a	10' 10" a
1400S350-68	50	22' 3" e	19' 3" e	14' 4" e	19' 4" a	15' 7" a	11' 4" a	22' 3" e	19' 3" e	14' 4" e	19' 4" a	15' 7" a	11' 4" a
1400S200-97	50	24' 5"	21' 1" e	17' 3" e	24' 5" i	21' 1" i	17' 3" a	22' 6"	20' 6"	17' 3" e	24' 5" i	21' 1" i	17' 3" a
1400S250-97	50	25' 3"	21' 11" e	17' 10" e	25' 3" i	21' 11" i	17' 10" a	23' 4"	21' 3" e	17' 10" e	25' 3" i	21' 11" i	17' 10" a
1400S300-97	50	25' 10"	22' 5" e	18' 3" e	25' 10" i	22' 5" i	18' 3" a	24' 1"	21' 11" e	18' 3" e	25' 10" i	22' 5" i	18' 3" a
1400S350-97	50	28' 0" e	24' 8" e	20' 2" e	28' 6" i	24' 8" i	20' 2" a	25' 5"	23' 1" e	20' 2" e	28' 6" i	24' 8" i	20' 2" a
1400S200-118	50	26' 7"	24' 1"	19' 11"	28' 1" i	24' 4" i	19' 11" i	24' 1"	21' 11"	19' 2"	27' 1" i	24' 4" i	19' 11" i
1400S250-118	50	27' 6"	25' 0"	20' 7" e	29' 2" i	25' 3" i	20' 7" i	25' 0"	22' 8"	19' 10"	28' 1" i	25' 3" i	20' 7" i
1400S300-118	50	28' 5"	25' 10"	21' 2" e	29' 11" i	25' 10" i	21' 2" i	25' 10"	23' 5"	20' 6" e	29' 0" i	25' 10" i	21' 2" i
1400S350-118	50	29' 9"	27' 0"	23' 7" e	33' 5" i	29' 3" i	23' 11" a	27' 0"	24' 7"	21' 5" e	30' 4" i	27' 7" i	23' 11" a
1600S200-68	50	19' 9" e	17' 1" e	12' 6" e	17' 0" a	13' 8" a	9' 11" a	19' 9" e	17' 1" e	12' 6" e	17' 0" a	13' 8" a	9' 11" a
1600S250-68	50	20' 7" e	17' 10" e	12' 6" e	17' 4" a	13' 11" a	10' 0" a	20' 7" e	17' 10" e	12' 6" e	17' 4" a	13' 11" a	10' 0" a
1600S300-68	50	21' 2" e	18' 4" e	12' 6" e	17' 7" a	14' 1" a	10' 0" a	21' 2" e	18' 4" e	12' 6" e	17' 7" a	14' 1" a	10' 0" a
1600S350-68	50	23' 8" e	18' 9" e	12' 6" e	18' 7" a	14' 9" a	10' 0" a	23' 8" e	18' 9" e	12' 6" e	18' 7" a	14' 9" a	10' 0" a
1600S200-97	50	25' 10"	22' 4" e	18' 3" e	25' 10" i	22' 4" i	18' 3" a	25' 1"	22' 4" e	18' 3" e	25' 10" i	22' 4" i	18' 3" a
1600S250-97	50	26' 10"	23' 3" e	19' 0" e	26' 10" i	23' 3" i	19' 0" a	25' 11"	23' 3" e	19' 0" e	26' 10" i	23' 3" i	19' 0" a
1600S300-97	50	27' 7" e	23' 11" e	19' 6" e	27' 7" i	23' 11" i	19' 6" a	26' 9"	23' 11" e	19' 6" e	27' 7" i	23' 11" i	19' 6" a
1600S350-97	50	30' 6" e	26' 5" e	21' 7" e	30' 6" i	26' 5" a	21' 2" a	28' 0" e	25' 5" e	21' 7" e	30' 6" i	26' 5" a	21' 2" a
1600S200-118	50	29' 7"	25' 11"	21' 2" e	29' 11" i	25' 11" i	21' 2" i	26' 11"	24' 5"	21' 2" e	29' 11" i	25' 11" i	21' 2" i
1600S250-118	50	30' 7"	27' 0"	22' 0" e	31' 2" i	27' 0" i	22' 0" i	27' 10"	25' 3"	22' 0" e	31' 2" i	27' 0" i	22' 0" i
1600S300-118	50	31' 7"	27' 9"	22' 8" e	32' 0" i	27' 9" i	22' 8" i	28' 8"	26' 1"	22' 8" e	32' 0" i	27' 9" i	22' 8" i
1600S350-118	50	33' 0"	30' 0" e	24' 10" e	35' 1" i	30' 5" i	24' 10" a	30' 0"	27' 3"	23' 9" e	33' 8" i	30' 5" i	24' 10" a

See Allowable Floor Joist Span Table Notes on page 62.

Header Load Table Notes

1. Calculated properties are based on AISI S100-12, "North American Specification for Design of Cold-Formed Steel Structural Members."
2. Allowable deflection limit is L/360.
3. Allowable capacities have not been modified for wind or earthquake loading.
4. Headers are made from two "boxed" or back-to-back members.
4. Allowable moment, shear, and web crippling capacities are based on twice the capacity of a single member. The moment of inertia is based on twice the value of the single member.
5. Minimum bearing length for web crippling = 1-inch
6. Capacities are calculated for unpunched members only.
7. Members are assumed adequately braced for bending.
8. Allowable loads are for simply supported headers with uniform bending loads only.
9. " e " Web stiffeners are required at each support.

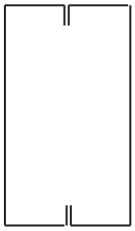

Boxed Header

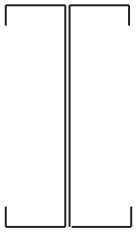

Back-to-Back "I" Header

SFIA STEEL FRAMING INDUSTRY ASSOCIATION

Header Allowable Uniform Loads (lb/ft)

Member	Yield, F_y, ksi	SPAN						
		3 (ft)	4 (ft)	5 (ft)	6 (ft)	8 (ft)	10 (ft)	12 (ft)
550S162-33	33	931 e	699 e	539 e	375 e	211 e	127 e	74 e
550S162-43	33	2067 e	1232 e	789 e	548 e	308 e	165 e	95 e
550S162-54	33	2779 e	1563 e	1001 e	695 e	391 e	203 e	118
550S162-54	50	3979 e	2238 e	1433 e	941 e	397 e	203	118
550S162-68	33	3514 e	1977 e	1265 e	879 e	489 e	250 e	145
550S162-68	50	5176 e	2912 e	1863 e	1158 e	489 e	250	145
600S137-33	33	851 e	638 e	479 e	333 e	187 e	120 e	78 e
600S162-33	33	851 e	638 e	510 e	423 e	238 e	152 e	91 e
600S200-33	33	851 e	638 e	510 e	425 e	256 e	164 e	104 e
600S137-43	33	1887 e	1061 e	679 e	472 e	265 e	170 e	103 e
600S162-43	33	1888 e	1390 e	890 e	618 e	348 e	202 e	117 e
600S200-43	33	1888 e	1416 e	920 e	639 e	359 e	230 e	136 e
600S250-43	33	1888 e	1416 e	967 e	672 e	378 e	242 e	156 e
600S137-54	33	2436 e	1370 e	877 e	609 e	343 e	219 e	127
600S137-54	50	3446 e	1938 e	1241 e	862 e	430 e	220	127
600S162-54	33	3136 e	1764 e	1129 e	784 e	441 e	250 e	145 e
600S162-54	50	3012 e	1694 e	1084 e	753 e	424 e	250 e	145
600S200-54	33	3566 e	2006 e	1284 e	891 e	501 e	290 e	168 e
600S200-54	50	3764 e	2533 e	1621 e	1126 e	567 e	290 e	168
600S250-54	33	3392 e	1908 e	1221 e	848 e	477 e	305 e	193 e
600S250-54	50	3764 e	2667 e	1707 e	1185 e	643 e	329 e	190
600S137-68	33	3563 e	2004 e	1283 e	891 e	501 e	270 e	157
600S137-68	50	4570 e	2570 e	1645 e	1142 e	528 e	270	157
600S162-68	33	3969 e	2232 e	1429 e	992 e	558 e	308 e	178
600S162-68	50	5847 e	3289 e	2105 e	1426 e	602 e	308	178
600S200-68	33	4507 e	2535 e	1622 e	1127 e	634 e	358 e	207 e
600S200-68	50	6476 e	3642 e	2331 e	1619 e	700 e	358	207
600S250-68	33	4862 e	2735 e	1750 e	1216 e	684 e	413 e	239 e
600S250-68	50	6147 e	3458 e	2213 e	1537 e	806 e	413 e	239
600S137-97	33	5108 e	2873 e	1839 e	1277 e	715 e	366	212
600S137-97	50	7526 e	4233 e	2709 e	1695 e	715	366	212
600S162-97	33	5684 e	3198 e	2046 e	1421 e	799 e	419	243
600S162-97	50	8404 e	4728 e	3026 e	1942 e	819	419	243
600S200-97	33	6443 e	3624 e	2319 e	1611 e	906 e	491 e	284
600S200-97	50	9560 e	5378 e	3442 e	2271 e	958 e	491	284
600S250-97	33	7231 e	4068 e	2603 e	1808 e	1017 e	568 e	329
600S250-97	50	10279 e	5782 e	3700 e	2570 e	1109 e	568	329
600S162-118	33	6936 e	3902 e	2497 e	1734 e	965 e	494	286
600S162-118	50	10213 e	5745 e	3677 e	2288 e	965	494	286
600S200-118	33	7859 e	4421 e	2829 e	1965 e	1105 e	581	336
600S200-118	50	11621 e	6537 e	4183 e	2688 e	1134	581	336
600S250-118	33	8827 e	4965 e	3178 e	2207 e	1241 e	674 e	390
600S250-118	50	12729 e	7160 e	4582 e	3122 e	1317 e	674	390

See Header Load Table Notes on page 76.

Header Allowable Uniform Loads (lb/ft)

Member	Yield, F_y, ksi	SPAN 3 (ft)	4 (ft)	5 (ft)	6 (ft)	8 (ft)	10 (ft)	12 (ft)
800S137-33	33	632 e	474 e	379 e	316 e	237 e	164 e	114 e
800S162-33	33	632 e	474 e	379 e	316 e	237 e	187 e	130 e
800S200-33	33	632 e	474 e	379 e	316 e	237 e	190 e	149 e
800S137-43	33	1402 e	1051 e	841 e	656 e	369 e	236 e	164 e
800S162-43	33	1402 e	1051 e	841 e	701 e	420 e	269 e	186 e
800S200-43	33	1402 e	1051 e	841 e	701 e	526 e	341 e	237 e
800S250-43	33	1402 e	1051 e	841 e	701 e	526 e	346 e	240 e
800S137-54	33	2788 e	1941 e	1242 e	863 e	485 e	311 e	216 e
800S137-54	50	2788 e	2091 e	1673 e	1201 e	676 e	432 e	252 e
800S162-54	33	2788 e	2091 e	1406 e	976 e	549 e	351 e	244 e
800S162-54	50	2788 e	2091 e	1673 e	1363 e	767 e	489 e	283 e
800S200-54	33	2788 e	2091 e	1673 e	1324 e	745 e	477 e	331 e
800S200-54	50	2788 e	2091 e	1673 e	1394 e	935 e	574 e	332 e
800S250-54	33	2788 e	2091 e	1673 e	1253 e	705 e	451 e	313 e
800S250-54	50	2788 e	2091 e	1673 e	1394 e	951 e	609 e	373 e
800S137-68	33	4511 e	2538 e	1624 e	1128 e	634 e	406 e	282 e
800S137-68	50	5628 e	3664 e	2345 e	1628 e	916 e	549 e	318 e
800S162-68	33	5085 e	2860 e	1831 e	1271 e	715 e	458 e	318 e
800S162-68	50	5628 e	4150 e	2656 e	1845 e	1038 e	618 e	358 e
800S200-68	33	5628 e	3774 e	2415 e	1677 e	944 e	604 e	412 e
800S200-68	50	5628 e	4221 e	3377 e	2415 e	1359 e	712 e	412 e
800S250-68	33	5628 e	4028 e	2578 e	1790 e	1007 e	644 e	448 e
800S250-68	50	5628 e	4221 e	3288 e	2283 e	1284 e	808 e	467 e
800S137-97	33	7865 e	4424 e	2831 e	1966 e	1106 e	708 e	435 e
800S137-97	50	9535 e	5363 e	3432 e	2384 e	1341 e	752 e	435
800S162-97	33	8633 e	4856 e	3108 e	2158 e	1214 e	777 e	491 e
800S162-97	50	10772 e	6059 e	3878 e	2693 e	1515 e	849 e	491
800S200-97	33	9647 e	5427 e	3473 e	2412 e	1357 e	868 e	567 e
800S200-97	50	14316 e	8052 e	5154 e	3579 e	1913 e	979 e	567
800S250-97	33	10677 e	6006 e	3844 e	2669 e	1501 e	961 e	647 e
800S250-97	50	14514 e	8558 e	5477 e	3804 e	2140 e	1118 e	647 e
800S162-118	33	10588 e	5956 e	3812 e	2647 e	1489 e	953 e	582 e
800S162-118	50	15590 e	8769 e	5612 e	3897 e	1964 e	1006 e	582
800S200-118	33	11819 e	6648 e	4255 e	2955 e	1662 e	1064 e	674 e
800S200-118	50	17474 e	9829 e	6291 e	4369 e	2273 e	1164 e	674
800S250-118	33	13083 e	7359 e	4710 e	3271 e	1840 e	1177 e	771 e
800S250-118	50	18890 e	10626 e	6801 e	4723 e	2602 e	1332 e	771
1000S137-43	33	1115 e	836 e	669 e	557 e	418 e	302 e	210 e
1000S162-43	33	1115 e	836 e	669 e	557 e	418 e	334 e	238 e
1000S200-43	33	1115 e	836 e	669 e	557 e	418 e	334 e	269 e
1000S250-43	33	1115 e	836 e	669 e	557 e	418 e	334 e	279 e
1000S137-54	33	2214 e	1661 e	1329 e	1107 e	628 e	402 e	279 e
1000S137-54	50	2214 e	1661 e	1329 e	1107 e	830 e	554 e	385 e
1000S162-54	33	2214 e	1661 e	1329 e	1107 e	709 e	454 e	315 e
1000S162-54	50	2214 e	1661 e	1329 e	1107 e	830 e	628 e	436 e
1000S200-54	33	2214 e	1661 e	1329 e	1107 e	817 e	523 e	363 e
1000S200-54	50	2214 e	1661 e	1329 e	1107 e	830 e	664 e	473 e
1000S250-54	33	2214 e	1661 e	1329 e	1107 e	830 e	600 e	417 e
1000S250-54	50	2214 e	1661 e	1329 e	1107 e	830 e	664 e	521 e
1000S137-68	33	4460 e	3341 e	2138 e	1485 e	835 e	535 e	371 e
1000S137-68	50	4460 e	3345 e	2676 e	2116 e	1190 e	762 e	529 e
1000S162-68	33	4460 e	3345 e	2399 e	1666 e	937 e	600 e	416 e
1000S162-68	50	4460 e	3345 e	2676 e	2230 e	1344 e	860 e	597 e
1000S200-68	33	4460 e	3345 e	2676 e	1908 e	1073 e	687 e	477 e
1000S200-68	50	4460 e	3345 e	2676 e	2230 e	1510 e	966 e	671 e
1000S250-68	33	4460 e	3345 e	2676 e	2230 e	1374 e	879 e	610 e
1000S250-68	50	4460 e	3345 e	2676 e	2230 e	1673 e	1105 e	768 e
1000S137-97	33	8896 e	5004 e	3202 e	2224 e	1251 e	801 e	556 e
1000S137-97	50	12938 e	7278 e	4658 e	3234 e	1819 e	1164 e	769 e
1000S162-97	33	9935 e	5588 e	3576 e	2484 e	1397 e	894 e	621 e
1000S162-97	50	13151 e	8158 e	5221 e	3626 e	2039 e	1305 e	858 e
1000S200-97	33	11322 e	6368 e	4076 e	2830 e	1592 e	1019 e	708 e
1000S200-97	50	13151 e	9334 e	5974 e	4148 e	2333 e	1493 e	978 e
1000S250-97	33	11791 e	8201 e	5249 e	3645 e	2050 e	1312 e	911 e
1000S250-97	50	13151 e	9864 e	7500 e	5209 e	2930 e	1875 e	1104 e

See Header Load Table Notes on page 76.

SFIA STEEL FRAMING INDUSTRY ASSOCIATION

Header Allowable Uniform Loads (lb/ft)

Member	Yield, F_y, ksi	SPAN 3 (ft)	4 (ft)	5 (ft)	6 (ft)	8 (ft)	10 (ft)	12 (ft)
1000S162-118	33	14850 e	8353 e	5346 e	3713 e	2088 e	1337 e	928 e
1000S162-118	50	17894 e	10065 e	6442 e	4473 e	2516 e	1610 e	1020 e
1000S200-118	33	16370 e	9208 e	5893 e	4093 e	2302 e	1473 e	1023 e
1000S200-118	50	20451 e	11504 e	7362 e	5113 e	2876 e	1841 e	1166 e
1000S250-118	33	17585 e	10074 e	6447 e	4477 e	2519 e	1612 e	1119 e
1000S250-118	50	21646 e	14570 e	9325 e	6476 e	3642 e	2280 e	1319 e
1200S137-54	33	1836 e	1377 e	1102 e	918 e	689 e	493 e	343 e
1200S137-54	50	1836 e	1377 e	1102 e	918 e	689 e	551 e	459 e
1200S162-54	33	1836 e	1377 e	1102 e	918 e	689 e	551 e	386 e
1200S162-54	50	1836 e	1377 e	1102 e	918 e	689 e	551 e	459 e
1200S200-54	33	1836 e	1377 e	1102 e	918 e	689 e	551 e	444 e
1200S200-54	50	1836 e	1377 e	1102 e	918 e	689 e	551 e	459 e
1200S250-54	33	1836 e	1377 e	1102 e	918 e	689 e	551 e	454 e
1200S250-54	50	1836 e	1377 e	1102 e	918 e	689 e	551 e	459 e
1200S137-68	33	3694 e	2771 e	2217 e	1843 e	1037 e	664 e	461 e
1200S137-68	50	3694 e	2771 e	2217 e	1847 e	1385 e	937 e	651 e
1200S162-68	33	3694 e	2771 e	2217 e	1847 e	1160 e	742 e	515 e
1200S162-68	50	3694 e	2771 e	2217 e	1847 e	1385 e	1056 e	733 e
1200S200-68	33	3694 e	2771 e	2217 e	1847 e	1324 e	847 e	588 e
1200S200-68	50	3694 e	2771 e	2217 e	1847 e	1385 e	1108 e	821 e
1200S250-68	33	3694 e	2771 e	2217 e	1847 e	1385 e	921 e	640 e
1200S250-68	50	3694 e	2771 e	2217 e	1847 e	1385 e	1108 e	834 e
1200S137-97	33	10863 e	6421 e	4109 e	2854 e	1605 e	1027 e	713 e
1200S137-97	50	10863 e	8147 e	5854 e	4065 e	2287 e	1463 e	1016 e
1200S162-97	33	10863 e	7126 e	4561 e	3167 e	1781 e	1140 e	792 e
1200S162-97	50	10863 e	8147 e	6518 e	4537 e	2552 e	1633 e	1134 e
1200S200-97	33	10863 e	8068 e	5163 e	3586 e	2017 e	1291 e	896 e
1200S200-97	50	10863 e	8147 e	6518 e	5167 e	2907 e	1860 e	1292 e
1200S250-97	33	10863 e	8147 e	5792 e	4022 e	2263 e	1448 e	1006 e
1200S250-97	50	10863 e	8147 e	6518 e	5431 e	3142 e	2011 e	1397 e
1200S162-118	33	15685 e	8823 e	5646 e	3921 e	2206 e	1412 e	980 e
1200S162-118	50	19981 e	12896 e	8253 e	5731 e	3224 e	2063 e	1433 e
1200S200-118	33	17585 e	9976 e	6385 e	4434 e	2494 e	1596 e	1108 e
1200S200-118	50	19981 e	14634 e	9366 e	6504 e	3658 e	2341 e	1626 e
1200S250-118	33	17585 e	11178 e	7154 e	4968 e	2794 e	1788 e	1242 e
1200S250-118	50	19981 e	14986 e	10446 e	7254 e	4080 e	2611 e	1813 e
1200S300-118	33	17585 e	13189 e	8841 e	6139 e	3453 e	2210 e	1535 e
1200S300-118	50	19981 e	14986 e	11988 e	9025 e	5076 e	3249 e	2256 e
1200S350-118	33	17585 e	13189 e	10279 e	7139 e	4015 e	2570 e	1785 e
1200S350-118	50	19981 e	14986 e	11988 e	9990 e	5710 e	3654 e	2538 e
1400S200-54	33	1569 e	1177 e	941 e	784 e	588 e	471 e	392 e
1400S200-54	50	1569 e	1177 e	941 e	784 e	588 e	471 e	392 e
1400S250-54	33	1569 e	1177 e	941 e	784 e	588 e	471 e	392 e
1400S250-54	50	1569 e	1177 e	941 e	784 e	588 e	471 e	392 e
1400S300-54	33	1569 e	1177 e	941 e	784 e	588 e	471 e	392 e
1400S300-54	50	1569 e	1177 e	941 e	784 e	588 e	471 e	392 e
1400S350-54	33	1569 e	1177 e	941 e	784 e	588 e	471 e	392 e
1400S350-54	50	1569 e	1177 e	941 e	784 e	588 e	471 e	392 e
1400S200-68	33	3153 e	2365 e	1892 e	1576 e	1182 e	946 e	700 e
1400S200-68	50	3153 e	2365 e	1892 e	1576 e	1182 e	946 e	788 e
1400S250-68	33	3153 e	2365 e	1892 e	1576 e	1182 e	946 e	758 e
1400S250-68	50	3153 e	2365 e	1892 e	1576 e	1182 e	946 e	788 e
1400S300-68	33	3153 e	2365 e	1892 e	1576 e	1182 e	946 e	775 e
1400S300-68	50	3153 e	2365 e	1892 e	1576 e	1182 e	946 e	788 e
1400S350-68	33	3153 e	2365 e	1892 e	1576 e	1182 e	946 e	788 e
1400S350-68	50	3153 e	2365 e	1892 e	1576 e	1182 e	946 e	788 e
1400S200-97	33	9252 e	6939 e	5551 e	4331 e	2436 e	1559 e	1083 e
1400S200-97	50	9252 e	6939 e	5551 e	4626 e	3470 e	2228 e	1547 e
1400S250-97	33	9252 e	6939 e	5551 e	4626 e	2722 e	1742 e	1210 e
1400S250-97	50	9252 e	6939 e	5551 e	4626 e	3470 e	2399 e	1666 e

See Header Load Table Notes on page 76.

Header Allowable Uniform Loads (lb/ft)

Member	Yield, F_y, ksi	SPAN 3 (ft)	4 (ft)	5 (ft)	6 (ft)	8 (ft)	10 (ft)	12 (ft)
1400S300-97	33	9252 e	6939 e	5551 e	4626 e	2896 e	1854 e	1287 e
1400S300-97	50	9252 e	6939 e	5551 e	4626 e	3470 e	2544 e	1767 e
1400S350-97	33	9252 e	6939 e	5551 e	4626 e	3470 e	2548 e	1769 e
1400S350-97	50	9252 e	6939 e	5551 e	4626 e	3470 e	2776 e	2270 e
1400S200-118	33	16994 e	12318 e	7884 e	5475 e	3080 e	1971 e	1369 e
1400S200-118	50	16994 e	12745 e	10196 e	7870 e	4427 e	2833 e	1967 e
1400S250-118	33	16994 e	12745 e	8780 e	6097 e	3430 e	2195 e	1524 e
1400S250-118	50	16994 e	12745 e	10196 e	8497 e	4916 e	3146 e	2185 e
1400S300-118	33	16994 e	12745 e	9534 e	6621 e	3724 e	2383 e	1655 e
1400S300-118	50	16994 e	12745 e	10196 e	8497 e	5256 e	3364 e	2336 e
1400S350-118	33	16994 e	12745 e	10196 e	8497 e	4978 e	3186 e	2212 e
1400S350-118	50	16994 e	12745 e	10196 e	8497 e	6373 e	4539 e	3152 e
1600S200-68	33	2750 e	2062 e	1650 e	1375 e	1031 e	825 e	687 e
1600S200-68	50	2750 e	2062 e	1650 e	1375 e	1031 e	825 e	687 e
1600S250-68	33	2750 e	2062 e	1650 e	1375 e	1031 e	825 e	687 e
1600S250-68	50	2750 e	2062 e	1650 e	1375 e	1031 e	825 e	687 e
1600S300-68	33	2750 e	2062 e	1650 e	1375 e	1031 e	825 e	687 e
1600S300-68	50	2750 e	2062 e	1650 e	1375 e	1031 e	825 e	687 e
1600S350-68	33	2750 e	2062 e	1650 e	1375 e	1031 e	825 e	687 e
1600S350-68	50	2750 e	2062 e	1650 e	1375 e	1031 e	825 e	687 e
1600S200-97	33	8058 e	6043 e	4835 e	4029 e	2856 e	1828 e	1269 e
1600S200-97	50	8058 e	6043 e	4835 e	4029 e	3022 e	2417 e	1802 e
1600S250-97	33	8058 e	6043 e	4835 e	4029 e	3022 e	2036 e	1414 e
1600S250-97	50	8058 e	6043 e	4835 e	4029 e	3022 e	2417 e	1936 e
1600S300-97	33	8058 e	6043 e	4835 e	4029 e	3022 e	2161 e	1501 e
1600S300-97	50	8058 e	6043 e	4835 e	4029 e	3022 e	2417 e	2014 e
1600S350-97	33	8058 e	6043 e	4835 e	4029 e	3022 e	2417 e	1788 e
1600S350-97	50	8058 e	6043 e	4835 e	4029 e	3022 e	2417 e	2014 e
1600S200-118	33	14784 e	11088 e	8870 e	6484 e	3647 e	2334 e	1621 e
1600S200-118	50	14784 e	11088 e	8870 e	7392 e	5197 e	3326 e	2310 e
1600S250-118	33	14784 e	11088 e	8870 e	7193 e	4046 e	2589 e	1798 e
1600S250-118	50	14784 e	11088 e	8870 e	7392 e	5544 e	3682 e	2557 e
1600S300-118	33	14784 e	11088 e	8870 e	7392 e	4379 e	2803 e	1946 e
1600S300-118	50	14784 e	11088 e	8870 e	7392 e	5544 e	3927 e	2727 e
1600S350-118	33	14784 e	11088 e	8870 e	7392 e	5091 e	3259 e	2263 e
1600S350-118	50	14784 e	11088 e	8870 e	7392 e	5544 e	4435 e	3134 e

See Header Load Table Notes on page 76.

Web Crippling Load Table Notes

1. All capacities listed are calculated using AISI S100-12.
2. Web crippling capacities calculated are for studs with stiffened or partially stiffened flanges.
3. Tabulated web crippling capacities are for single members only. For multiple members, multiply the tabulated values by number of members in the assembly.
4. Listed allowable capacities are based on members 'fastened to supports', except back-to-back members under two-flange loading (condition 3 and 4) for which data for 'fastened to support' is unavailable in the AISI S100-12.
5. Listed allowable capacities are for unpunched webs. Capacity reduction for end and interior one flange loading (conditions 1 and 2) near punchouts may be required per Section C3.4.2 of S100.

Web Crippling Conditions

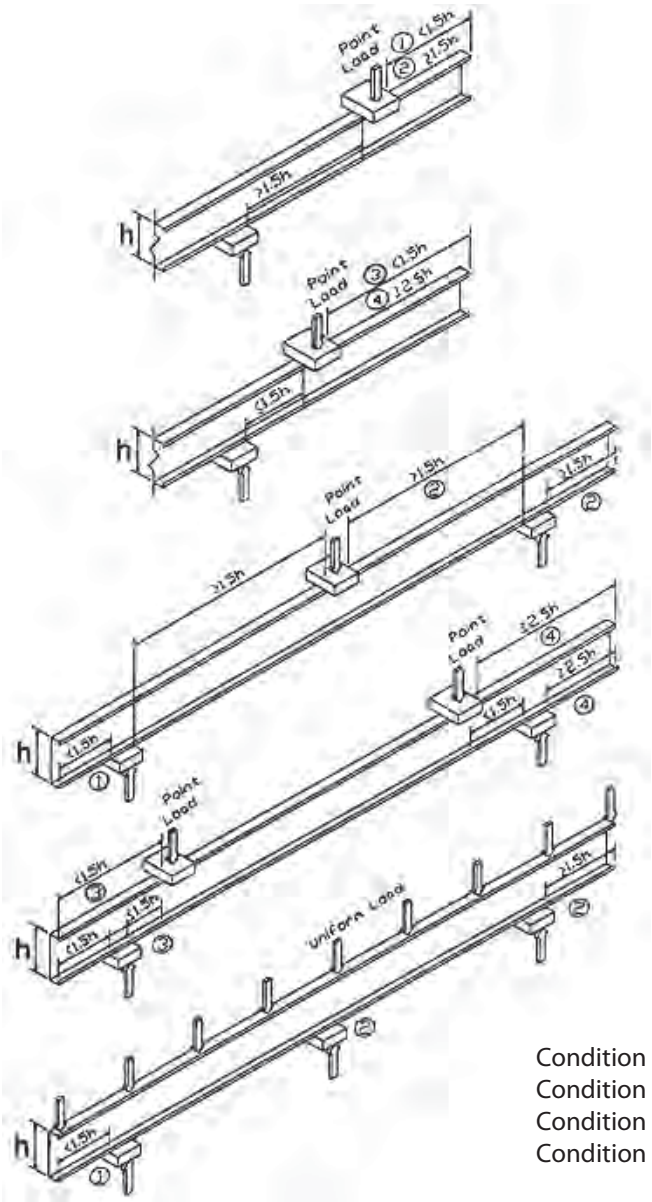

Condition 1: End One-Flange Reaction
Condition 2: Interior One-Flange Reaction
Condition 3: End Two-Flange Reaction
Condition 4: Interior Two-Flange Reaction

Web Crippling Load Tables

SFIA
STEEL FRAMING INDUSTRY ASSOCIATION

Allowable Web Crippling Loads (lbs) - Single Members

Member	Design Thickness	Inside Radius	Yield Str	Condition 1				Condition 2				Condition 3				Condition 4			
				1	3.5	4	6	1	3.5	4	6	1	3.5	4	6	1	3.5	4	6
162S - 18	0.0188	0.0843	33	55	90 [1]	95 [1,2]	112 [1,2]	87	125 [1]	131 [1,2]	151 [1,2]	45	64 [1]	67 [1,2]	76 [1,2]	122	161 [1]	166 [1,2]	186 [1,2]
162S - 27	0.0283	0.0796	33	122	194 [1]	205 [1]	242 [1,2]	218	304 [1]	317 [1]	361 [1,2]	111	151 [1]	157 [1]	178 [1,2]	290	371 [1]	383 [1]	425 [1,2]
162S - 30	0.0312	0.0781	33	148	233 [1]	246 [1]	290 [1]	269	373 [1]	388 [1]	442 [1]	137	185 [1]	192 [1]	217 [1]	356	452 [1]	466 [1]	516 [1]
162S - 33	0.0346	0.0764	33	180	282 [1]	297 [1]	350 [1]	336	462 [1]	481 [1]	546 [1]	170	229 [1]	237 [1]	267 [1]	441	557 [1]	574 [1]	634 [1]
162S - 43	0.0451	0.0712	33	298	459 [1]	483 [1]	566 [1]	589	793 [1]	823 [1]	929 [1]	297	390 [1]	404 [1]	452 [1]	764	946 [1]	973 [1]	1067 [1]
162S - 54	0.0566	0.0849	33	447	678 [1]	712 [1]	832 [1]	904	1196 [1]	1239 [1]	1390 [1]	471	609 [1]	629 [1]	700 [1]	1203	1466 [1]	1506 [1]	1642 [1]
162S - 54	0.0566	0.0849	50	677	1027 [1]	1079 [1]	1260 [1]	1370	1812 [1]	1877 [1]	2105 [1]	714	922 [1]	953 [1]	1061 [1]	1823	2222 [1]	2281 [1]	2487 [1]
162S - 68	0.0713	0.1069	33	672	1004 [1]	1054 [1]	1225 [1]	1386	1802 [1]	1863 [1]	2077 [1]	750	952 [1]	982 [1]	1087 [1]	1901	2282 [1]	2339 [1]	2536 [1]
162S - 68	0.0713	0.1069	50	1019	1522 [1]	1596 [1]	1856 [1]	2100	2730 [1]	2823 [1]	3148 [1]	1136	1443 [1]	1488 [1]	1646 [1]	2880	3458 [1]	3544 [1]	3842 [1]
250S - 18	0.0188	0.0843	33	52	84	89 [2]	106 [1,2]	85	122	128 [2]	147 [1,2]	37	51	54 [2]	61 [1,2]	109	145	150 [2]	168 [1,2]
250S - 27	0.0283	0.0796	33	117	186	196	231 [1,2]	213	298	310	354 [1,2]	96	130	135	153 [1,2]	268	343	354	393 [1,2]
250S - 30	0.0312	0.0781	33	141	223	235	277 [1]	264	366	381	433 [1]	119	161	167	189 [1]	330	420	433	479 [1]
250S - 33	0.0346	0.0764	33	173	271	285	336 [1]	330	453	472	535 [1]	150	201	209	235 [1]	411	519	535	591 [1]
250S - 43	0.0451	0.0712	33	287	443	466	547 [1]	580	780	810	913 [1]	267	351	364	407 [1]	720	892	918	1006 [1]
250S - 54	0.0566	0.0849	33	433	657	690	806 [1]	891	1178	1221	1369 [1]	430	556	574	639 [1]	1142	1392	1429	1558 [1]
250S - 54	0.0566	0.0849	50	656	996	1046	1222 [1]	1350	1785	1850	2075 [1]	652	842	870	968 [1]	1730	2109	2165	2361 [1]
250S - 68	0.0713	0.1069	33	654	977	1024	1191 [1]	1368	1778	1839	2050 [1]	693	880	907	1004 [1]	1815	2179	2233	2421 [1]
250S - 68	0.0713	0.1069	50	990	1480	1552	1805 [1]	2073	2694	2786	3106 [1]	1049	1333	1375	1521 [1]	2750	3302	3384	3669 [1]
350S - 18	0.0188	0.0843	33	49	80	84 [2]	100 [2]	83	119	124 [2]	143 [2]	28	40	42 [2]	48 [2]	98	130	134 [2]	151 [2]
350S - 27	0.0283	0.0796	33	112	177	187	221 [2]	209	292	304	347 [2]	81	111	115	130 [2]	247	316	327	362 [2]
350S - 30	0.0312	0.0781	33	135	214	226	266	259	359	374	425	103	139	144	163	306	389	402	445
350S - 33	0.0346	0.0764	33	166	260	274	323	324	445	463	526	131	175	182	205	384	484	499	551
350S - 43	0.0451	0.0712	33	278	428	451	528	571	768	798	900	240	315	326	365	680	842	866	949
350S - 54	0.0566	0.0849	33	420	638	670	783	879	1162	1204	1351	392	507	524	583	1086	1324	1359	1482
350S - 54	0.0566	0.0849	50	637	967	1016	1186	1331	1761	1825	2046	594	768	794	883	1645	2005	2059	2245
350S - 68	0.0713	0.1069	33	637	951	998	1160	1351	1756	1816	2025	640	813	839	928	1737	2085	2137	2317
350S - 68	0.0713	0.1069	50	965	1441	1512	1758	2047	2661	2752	3068	970	1232	1271	1406	2631	3159	3238	3510
350S - 97	0.1017	0.1525	33	1209	1760	1841	2126	2629	3328	3431	3792	1343	1663	1710	1876	3562	4184	4276	4597
350S - 97	0.1017	0.1525	50	1831	2666	2790	3221	3983	5042	5199	5745	2035	2520	2592	2842	5397	6339	6479	6966
362S - 18	0.0188	0.0843	33	49	79	84 [2]	99 [2]	82	119	124 [2]	143 [2]	27	39	40 [2]	46 [2]	97	128	133 [2]	149 [2]
362S - 27	0.0283	0.0796	33	111	177	186	220 [2]	209	291	303	346 [2]	80	108	113	127 [2]	245	313	324	359 [2]
362S - 30	0.0312	0.0781	33	135	213	224	265	258	358	373	424	101	136	141	160	304	386	398	441
362S - 33	0.0346	0.0764	33	165	259	273	322	323	444	462	525	129	173	179	202	381	480	495	547
362S - 43	0.0451	0.0712	33	277	427	449	526	570	767	796	898	236	311	322	360	675	836	860	943
362S - 54	0.0566	0.0849	33	419	636	668	780	877	1160	1202	1348	388	501	518	577	1079	1316	1351	1473
362S - 54	0.0566	0.0849	50	634	963	1012	1182	1329	1758	1822	2043	588	760	785	874	1635	1994	2047	2232
362S - 68	0.0713	0.1069	33	635	948	995	1157	1349	1754	1813	2022	635	806	831	920	1728	2074	2126	2305
362S - 68	0.0713	0.1069	50	962	1437	1507	1753	2044	2657	2748	3064	961	1221	1259	1393	2618	3143	3221	3492
362S - 97	0.1017	0.1525	33	1206	1755	1837	2120	2626	3324	3427	3787	1333	1651	1698	1862	3547	4166	4258	4578
362S - 97	0.1017	0.1525	50	1827	2659	2783	3212	3979	5036	5192	5738	2020	2501	2573	2821	5374	6313	6452	6936
400S - 27	0.0283	0.0796	33	109	174	183	217 [2]	207	289	301	344 [2]	75	102	106	120 [2]	238	305	315	349 [2]
400S - 30	0.0312	0.0781	33	133	210	221	261	257	356	370	421	95	129	134	151	296	376	388	429
400S - 33	0.0346	0.0764	33	163	256	269	317	322	442	460	522	122	164	170	192	372	469	483	534
400S - 43	0.0451	0.0712	33	274	422	444	520	567	763	792	893	227	299	309	346	662	819	843	924
400S - 54	0.0566	0.0849	33	415	629	661	772	873	1155	1197	1342	376	485	502	558	1061	1293	1328	1448
400S - 54	0.0566	0.0849	50	628	954	1002	1170	1323	1750	1813	2034	569	735	760	846	1607	1960	2012	2194
400S - 68	0.0713	0.1069	33	629	940	986	1147	1344	1746	1806	2014	617	784	809	895	1702	2044	2094	2271
400S - 68	0.0713	0.1069	50	953	1424	1494	1737	2036	2646	2737	3051	936	1188	1226	1356	2579	3097	3173	3441
400S - 97	0.1017	0.1525	33	1197	1742	1823	2105	2617	3312	3415	3774	1305	1616	1662	1823	3504	4116	4207	4523
400S - 97	0.1017	0.1525	50	1814	2640	2762	3189	3965	5018	5175	5718	1978	2448	2518	2761	5309	6236	6374	6853
550S - 27	0.0283	0.0796	33	103	164	173	205 [2]	202	282	294	336 [2]	58	79	82	93 [2]	214	274	283	314 [2]
550S - 30	0.0312	0.0781	33	126	199	210	248	251	348	362	412	76	103	107	120	268	341	351	389
550S - 33	0.0346	0.0764	33	155	243	256	302	315	432	450	511	100	134	139	157	339	428	441	487
550S - 43	0.0451	0.0712	33	262	405	426	499	556	749	778	877	195	256	265	297	614	760	782	858
550S - 54	0.0566	0.0849	33	400	607	638	745	859	1136	1177	1320	331	428	443	493	995	1213	1246	1358
550S - 54	0.0566	0.0849	50	606	920	966	1128	1302	1722	1784	2001	502	649	671	746	1508	1838	1887	2058
550S - 68	0.0713	0.1069	33	609	911	955	1111	1324	1721	1780	1985	557	707	729	807	1611	1934	1982	2149
550S - 68	0.0713	0.1069	50	923	1380	1447	1683	2007	2608	2697	3007	844	1071	1105	1223	2441	2931	3003	3256
550S - 97	0.1017	0.1525	33	1166	1697	1776	2050	2585	3272	3374	3728	1205	1492	1535	1683	3352	3937	4024	4326
550S - 97	0.1017	0.1525	50	1766	2571	2691	3106	3917	4957	5112	5649	1826	2261	2326	2550	5079	5966	6097	6555

See Web Crippling Load Table Notes page 81.

Web Crippling Load Tables

SFIA
STEEL FRAMING INDUSTRY ASSOCIATION

Allowable Web Crippling Loads (lbs) - Single Members

Member	Design Thickness	Inside Radius	Yield Str	Condition 1				Condition 2				Condition 3				Condition 4			
				1	3.5	4	6	1	3.5	4	6	1	3.5	4	6	1	3.5	4	6
600S - 30	0.0312	0.0781	33	124	196	206	244	249	345	360	409	70	95	98	111	260	330	340	377
600S - 33	0.0346	0.0764	33	153	240	253	297	313	430	447	507	93	125	130	146	330	416	429	473
600S - 43	0.0451	0.0712	33	259	400	420	493	553	745	773	872	185	243	252	282	600	743	764	838
600S - 54	0.0566	0.0849	33	395	600	631	736	855	1131	1172	1314	318	411	425	473	975	1189	1221	1331
600S - 54	0.0566	0.0849	50	599	909	956	1116	1295	1713	1775	1991	482	623	644	716	1478	1802	1850	2017
600S - 68	0.0713	0.1069	33	604	902	946	1100	1319	1714	1772	1976	539	684	706	781	1584	1901	1949	2113
600S - 68	0.0713	0.1069	50	914	1366	1433	1666	1998	2596	2685	2994	816	1036	1069	1183	2399	2881	2952	3201
600S - 97	0.1017	0.1525	50	1752	2551	2669	3081	3902	4939	5093	5628	1781	2205	2268	2487	5010	5885	6014	6466
600S - 118	0.1242	0.1863	50	2528	3625	3788	4354	5698	7108	7318	8046	2734	3339	3429	3741	7555	8772	8952	9581
800S - 43	0.0451	0.0712	33	247	381	401	470	542	730	757	854	150	197	204	228	548	678	698	765
800S - 54	0.0566	0.0849	33	379	576	605	706	839	1110	1150	1290	270	349	361	402	904	1102	1131	1234
800S - 54	0.0566	0.0849	50	575	872	917	1070	1272	1682	1743	1955	409	529	547	608	1370	1670	1714	1869
800S - 68	0.0713	0.1069	33	582	870	912	1061	1297	1686	1744	1944	473	601	619	685	1485	1783	1827	1981
800S - 68	0.0713	0.1069	50	882	1318	1382	1607	1966	2555	2642	2946	716	910	939	1038	2250	2701	2768	3001
800S - 97	0.1017	0.1525	50	1702	2477	2592	2992	3850	4873	5025	5553	1618	2003	2060	2259	4761	5593	5716	6146
800S - 118	0.1242	0.1863	50	2462	3531	3689	4241	5629	7023	7229	7949	2518	3075	3158	3445	7223	8387	8559	9160
1000S - 54	0.0566	0.0849	33	365	554	582	680	826	1092	1132	1269	228	295	305	339	841	1026	1053	1148
1000S - 54	0.0566	0.0849	50	553	840	882	1031	1251	1655	1715	1923	346	447	462	514	1275	1554	1595	1740
1000S - 68	0.0713	0.1069	33	563	842	883	1027	1279	1662	1719	1917	415	527	544	602	1398	1679	1721	1866
1000S - 68	0.0713	0.1069	50	854	1275	1338	1556	1938	2518	2604	2904	629	799	824	912	2119	2544	2607	2827
1000S - 97	0.1017	0.1525	50	1657	2413	2525	2914	3805	4816	4966	5488	1476	1827	1879	2060	4545	5338	5456	5866
1000S - 118	0.1242	0.1863	50	2405	3449	3604	4143	5569	6948	7152	7864	2330	2845	2921	3187	6934	8051	8217	8794
1200S - 68	0.0713	0.1069	33	547	817	857	996	1262	1641	1697	1892	363	462	476	527	1320	1585	1625	1762
1200S - 68	0.0713	0.1069	50	828	1237	1298	1509	1913	2486	2571	2866	551	699	721	798	2001	2402	2462	2669
1200S - 97	0.1017	0.1525	50	1618	2355	2464	2844	3764	4764	4912	5429	1348	1668	1716	1882	4350	5109	5222	5614
1200S - 118	0.1242	0.1863	50	2354	3375	3527	4054	5515	6881	7083	7788	2161	2638	2709	2956	6675	7750	7910	8465
1400S - 68	0.0713	0.1069	33	531	793	832	968	1247	1621	1676	1869	316	401	414	458	1249	1500	1537	1666
1400S - 68	0.0713	0.1069	50	805	1202	1261	1466	1890	2456	2540	2832	479	608	627	694	1892	2272	2329	2525
1400S - 97	0.1017	0.1525	50	1581	2302	2408	2780	3727	4717	4864	5375	1230	1523	1567	1718	4171	4900	5008	5384
1400S - 118	0.1242	0.1863	50	2307	3308	3456	3973	5466	6819	7020	7719	2006	2449	2515	2744	6437	7474	7628	8164
1600S - 97	0.1017	0.1525	50	1547	2252	2357	2721	3692	4673	4818	5325	1121	1388	1428	1566	4005	4705	4809	5170
1600S - 118	0.1242	0.1863	50	2263	3245	3391	3898	5420	6762	6961	7654	1862	2274	2335	2548	6217	7219	7367	7884

[1] Bearing length to web height ratio, N/h, exceeds limit of 2.0
[2] Bearing length to thickness ratio, N/t, exceeds limit of 210

See Web Crippling Load Table Notes page 81.

Web Crippling Load Tables

SFIA
STEEL FRAMING INDUSTRY ASSOCIATION

Allowable Web Crippling Loads (lbs) - Back-to-Back Members

Member	Design Thickness	Inside Radius	Yield Str	Condition 1				Condition 2				Condition 3				Condition 4			
				1	3.5	4	6	1	3.5	4	6	1	3.5	4	6	1	3.5	4	6
162S - 18	0.0188	0.0843	33	124	196 [1]	207 [1,2]	244 [1,2]	156	217 [1]	226 [1,2]	257 [1,2]	76	100 [1]	103 [1,2]	116 [1,2]	153	202 [1]	209 [1,2]	234 [1,2]
162S - 27	0.0283	0.0796	33	268	413 [1]	435 [1]	510 [1,2]	363	489 [1]	507 [1]	572 [1,2]	184	236 [1]	244 [1]	270 [1,2]	386	494 [1]	510 [1]	566 [1,2]
162S - 30	0.0312	0.0781	33	321	493 [1]	518 [1]	606 [1]	443	592 [1]	614 [1]	690 [1]	227	288 [1]	298 [1]	329 [1]	478	608 [1]	628 [1]	695 [1]
162S - 33	0.0346	0.0764	33	389	593 [1]	623 [1]	729 [1]	547	724 [1]	750 [1]	842 [1]	283	357 [1]	368 [1]	406 [1]	600	757 [1]	781 [1]	862 [1]
162S - 43	0.0451	0.0712	33	638	953 [1]	1000 [1]	1163 [1]	933	1211 [1]	1252 [1]	1395 [1]	494	612 [1]	629 [1]	690 [1]	1066	1320 [1]	1358 [1]	1489 [1]
162S - 54	0.0566	0.0849	33	949	1395 [1]	1462 [1]	1692 [1]	1427	1820 [1]	1878 [1]	2081 [1]	784	956 [1]	982 [1]	1071 [1]	1696	2068 [1]	2123 [1]	2315 [1]
162S - 54	0.0566	0.0849	50	1438	2114 [1]	2215 [1]	2564 [1]	2162	2757 [1]	2846 [1]	3153 [1]	1188	1449 [1]	1488 [1]	1622 [1]	2570	3134 [1]	3217 [1]	3508 [1]
162S - 68	0.0713	0.1069	33	1418	2050 [1]	2144 [1]	2470 [1]	2188	2744 [1]	2826 [1]	3113 [1]	1250	1501 [1]	1538 [1]	1667 [1]	2703	3246 [1]	3326 [1]	3606 [1]
162S - 68	0.0713	0.1069	50	2148	3106 [1]	3248 [1]	3742 [1]	3315	4157 [1]	4282 [1]	4717 [1]	1894	2274 [1]	2330 [1]	2526 [1]	4096	4918 [1]	5040 [1]	5464 [1]
250S - 18	0.0188	0.0843	33	123	196 [1]	206 [1,2]	244 [1,2]	156	216 [1]	225 [1,2]	256 [1,2]	65	85 [1]	88 [1,2]	99 [1,2]	131	172 [1]	179 [1,2]	200 [1,2]
250S - 27	0.0283	0.0796	33	267	412 [1]	434 [1]	509 [1,2]	363	488 [1]	506 [1]	571 [1,2]	164	211 [1]	217 [1]	241 [1,2]	344	441 [1]	455 [1]	505 [1,2]
250S - 30	0.0312	0.0781	33	320	492 [1]	517 [1]	605 [1]	443	590 [1]	612 [1]	689 [1]	204	260 [1]	268 [1]	296 [1]	430	547 [1]	564 [1]	625 [1]
250S - 33	0.0346	0.0764	33	389	592 [1]	622 [1]	727 [1]	546	723 [1]	749 [1]	840 [1]	256	323 [1]	333 [1]	368 [1]	544	686 [1]	708 [1]	781 [1]
250S - 43	0.0451	0.0712	33	637	952 [1]	999 [1]	1162 [1]	932	1209 [1]	1250 [1]	1393 [1]	455	563 [1]	580 [1]	636 [1]	982	1216 [1]	1251 [1]	1371 [1]
250S - 54	0.0566	0.0849	33	947	1393 [1]	1460 [1]	1690 [1]	1425	1817 [1]	1876 [1]	2078 [1]	730	890 [1]	914 [1]	997 [1]	1579	1925 [1]	1977 [1]	2155 [1]
250S - 54	0.0566	0.0849	50	1435	2111 [1]	2212 [1]	2560 [1]	2159	2753 [1]	2842 [1]	3149 [1]	1106	1349 [1]	1385 [1]	1510 [1]	2393	2917 [1]	2995 [1]	3266 [1]
250S - 68	0.0713	0.1069	33	1416	2047 [1]	2141 [1]	2467 [1]	2185	2740 [1]	2823 [1]	3109 [1]	1174	1409 [1]	1444 [1]	1566 [1]	2539	3048 [1]	3124 [1]	3387 [1]
250S - 68	0.0713	0.1069	50	2145	3102 [1]	3244 [1]	3737 [1]	3311	4152 [1]	4277 [1]	4711 [1]	1778	2135 [1]	2188 [1]	2373 [1]	3846	4618 [1]	4733 [1]	5131 [1]
350S - 18	0.0188	0.0843	33	123	195 [1]	206 [1,2]	243 [1,2]	156	216 [1]	225 [1,2]	256 [1,2]	55	72 [1]	75 [1,2]	84 [1,2]	110	145 [1]	151 [1,2]	169 [1,2]
350S - 27	0.0283	0.0796	33	267	412 [1]	433 [1]	508 [1,2]	362	487 [1]	505 [1]	570 [1,2]	146	187 [1]	193 [1]	214 [1,2]	306	391 [1]	404 [1]	448 [1,2]
350S - 30	0.0312	0.0781	33	320	491 [1]	516 [1]	604 [1]	442	589 [1]	611 [1]	688 [1]	183	233 [1]	240 [1]	266 [1]	386	490 [1]	506 [1]	560 [1]
350S - 33	0.0346	0.0764	33	388	591 [1]	621 [1]	726 [1]	545	721 [1]	748 [1]	839 [1]	232	292 [1]	301 [1]	333 [1]	492	621 [1]	640 [1]	706 [1]
350S - 43	0.0451	0.0712	33	636	951 [1]	997 [1]	1160 [1]	931	1207 [1]	1248 [1]	1391 [1]	419	519 [1]	534 [1]	585 [1]	904	1119 [1]	1151 [1]	1263 [1]
350S - 54	0.0566	0.0849	33	946	1392 [1]	1458 [1]	1688 [1]	1423	1815 [1]	1873 [1]	2075 [1]	680	829 [1]	852 [1]	929 [1]	1471	1794 [1]	1842 [1]	2008 [1]
350S - 54	0.0566	0.0849	50	1434	2109 [1]	2209 [1]	2557 [1]	2156	2750 [1]	2838 [1]	3144 [1]	1031	1257 [1]	1290 [1]	1407 [1]	2229	2718 [1]	2791 [1]	3043 [1]
350S - 68	0.0713	0.1069	33	1414	2045 [1]	2138 [1]	2464 [1]	2183	2737 [1]	2819 [1]	3106 [1]	1104	1326 [1]	1359 [1]	1473 [1]	2388	2867 [1]	2939 [1]	3186 [1]
350S - 68	0.0713	0.1069	50	2143	3098 [1]	3240 [1]	3733 [1]	3307	4147 [1]	4272 [1]	4706 [1]	1673	2009 [1]	2059 [1]	2232 [1]	3618	4345 [1]	4452 [1]	4827 [1]
350S - 97	0.1017	0.1525	33	2641	3716 [1]	3876 [1]	4431 [1]	4235	5181 [1]	5321 [1]	5809 [1]	2305	2708 [1]	2768 [1]	2976 [1]	4986	5857 [1]	5986 [1]	6435 [1]
350S - 97	0.1017	0.1525	50	4002	5631 [1]	5873 [1]	6713 [1]	6416	7850 [1]	8062 [1]	8802 [1]	3493	4103 [1]	4194 [1]	4508 [1]	7555	8874 [1]	9070 [1]	9751 [1]
362S - 18	0.0188	0.0843	33	123	195 [1]	206 [1,2]	243 [1,2]	155	216 [1]	225 [1,2]	256 [1,2]	53	70 [1]	73 [1,2]	82 [1,2]	108	142 [1]	147 [1,2]	165 [1,2]
362S - 27	0.0283	0.0796	33	266	411 [1]	433 [1]	508 [1,2]	362	487 [1]	505 [1]	570 [1,2]	144	184 [1]	190 [1]	211 [1,2]	301	386 [1]	398 [1]	442 [1,2]
362S - 30	0.0312	0.0781	33	320	491 [1]	516 [1]	604 [1]	442	589 [1]	611 [1]	687 [1]	181	230 [1]	237 [1]	262 [1]	381	484 [1]	499 [1]	553 [1]
362S - 33	0.0346	0.0764	33	388	591 [1]	621 [1]	726 [1]	545	721 [1]	747 [1]	839 [1]	229	289 [1]	298 [1]	329 [1]	486	613 [1]	632 [1]	698 [1]
362S - 43	0.0451	0.0712	33	636	950 [1]	997 [1]	1160 [1]	930	1207 [1]	1248 [1]	1391 [1]	415	514 [1]	528 [1]	579 [1]	895	1109 [1]	1140 [1]	1250 [1]
362S - 54	0.0566	0.0849	33	946	1391 [1]	1458 [1]	1687 [1]	1423	1815 [1]	1873 [1]	2075 [1]	675	823 [1]	845 [1]	921 [1]	1459	1779 [1]	1826 [1]	1992 [1]
362S - 54	0.0566	0.0849	50	1433	2108 [1]	2208 [1]	2557 [1]	2156	2750 [1]	2838 [1]	3144 [1]	1022	1246 [1]	1280 [1]	1395 [1]	2211	2695 [1]	2767 [1]	3017 [1]
362S - 68	0.0713	0.1069	33	1414	2045 [1]	2138 [1]	2463 [1]	2182	2737 [1]	2819 [1]	3105 [1]	1096	1316 [1]	1349 [1]	1463 [1]	2371	2847 [1]	2918 [1]	3163 [1]
362S - 68	0.0713	0.1069	50	2143	3098 [1]	3239 [1]	3732 [1]	3307	4147 [1]	4271 [1]	4705 [1]	1661	1995 [1]	2044 [1]	2216 [1]	3592	4314 [1]	4421 [1]	4793 [1]
362S - 97	0.1017	0.1525	33	2641	3716 [1]	3875 [1]	4430 [1]	4234	5180 [1]	5320 [1]	5809 [1]	2292	2693 [1]	2752 [1]	2959 [1]	4957	5823 [1]	5952 [1]	6399 [1]
362S - 97	0.1017	0.1525	50	4001	5630 [1]	5872 [1]	6713 [1]	6416	7849 [1]	8061 [1]	8801 [1]	3473	4080 [1]	4170 [1]	4483 [1]	7511	8823 [1]	9018 [1]	9695 [1]
400S - 27	0.0283	0.0796	33	266	411	433 [1]	507 [1,2]	362	486	505 [1]	569 [1,2]	138	177	182 [1]	202 [1,2]	289	370	382 [1]	424 [1,2]
400S - 30	0.0312	0.0781	33	320	490	516 [1]	604 [1]	441	589	611 [1]	687 [1]	174	221	228 [1]	252 [1]	366	465	480 [1]	531 [1]
400S - 33	0.0346	0.0764	33	388	591	621 [1]	726 [1]	545	721	747 [1]	838 [1]	221	279	287 [1]	317 [1]	469	592	610 [1]	673 [1]
400S - 43	0.0451	0.0712	33	635	950	997 [1]	1159 [1]	930	1206	1247 [1]	1390 [1]	403	499	513 [1]	563 [1]	870	1077	1108 [1]	1215 [1]
400S - 54	0.0566	0.0849	33	946	1391	1457 [1]	1687 [1]	1422	1814	1872 [1]	2074 [1]	658	803	824 [1]	899 [1]	1424	1736	1782 [1]	1943 [1]
400S - 54	0.0566	0.0849	50	1433	2107	2207 [1]	2556 [1]	2155	2748	2836 [1]	3143 [1]	998	1216	1249 [1]	1361 [1]	2157	2630	2700 [1]	2944 [1]
400S - 68	0.0713	0.1069	33	1414	2044	2137 [1]	2462 [1]	2181	2736	2818 [1]	3104 [1]	1074	1289	1321 [1]	1432 [1]	2322	2788	2857 [1]	3098 [1]
400S - 68	0.0713	0.1069	50	2142	3097	3238 [1]	3731 [1]	3305	4145	4270 [1]	4703 [1]	1627	1953	2002 [1]	2170 [1]	3518	4224	4329 [1]	4694 [1]
400S - 97	0.1017	0.1525	33	2640	3715	3874 [1]	4429 [1]	4233	5178	5319 [1]	5807 [1]	2254	2648	2706 [1]	2909 [1]	4875	5726	5853 [1]	6292 [1]
400S - 97	0.1017	0.1525	50	4000	5628	5870 [1]	6711 [1]	6414	7846	8059 [1]	8798 [1]	3415	4012	4100 [1]	4408 [1]	7386	8676	8868 [1]	9534 [1]
550S - 27	0.0283	0.0796	33	266	410	432	506 [1,2]	361	485	504	568 [1,2]	116	149	154	171 [1,2]	244	312	322	357 [1,2]
550S - 30	0.0312	0.0781	33	319	489	515	603 [1]	441	588	610	686 [1]	149	189	195	216 [1]	314	399	411	455 [1]
550S - 33	0.0346	0.0764	33	387	590	620	724 [1]	544	720	746	836 [1]	192	242	250	276 [1]	407	514	530	585 [1]
550S - 43	0.0451	0.0712	33	634	948	995	1157 [1]	928	1204	1245	1388 [1]	361	447	459	504 [1]	778	964	991	1087 [1]
550S - 54	0.0566	0.0849	33	944	1389	1455	1684 [1]	1420	1811	1869	2071 [1]	600	732	751	819 [1]	1298	1582	1624	1771 [1]
550S - 54	0.0566	0.0849	50	1431	2104	2204	2552 [1]	2152	2744	2832	3138 [1]	909	1108	1138	1241 [1]	1966	2397	2461	2683 [1]
550S - 68	0.0713	0.1069	33	1412	2041	2134	2459 [1]	2179	2732	2814	3100 [1]	993	1192	1222	1324 [1]	2147	2578	2642	2864 [1]
550S - 68	0.0713	0.1069	50	2139	3092	3234	3726 [1]	3301	4139	4264	4697 [1]	1504	1806	1851	2007 [1]	3253	3906	4003	4340 [1]
550S - 97	0.1017	0.1525	33	2637	3710	3870	4424 [1]	4228	5172	5313	5800 [1]	2119	2489	2544	2735 [1]	4583	5383	5502	5915 [1]
550S - 97	0.1017	0.1525	50	3995	5622	5863	6703 [1]	6406	7837	8049	8788 [1]	3211	3771	3855	4144 [1]	6944	8157	8337	8963 [1]

See Web Crippling Load Table Notes page 81.

Web Crippling Load Tables

SFIA
STEEL FRAMING INDUSTRY ASSOCIATION

Allowable Web Crippling Loads (lbs) - Back-to-Back Members

Member	Design Thickness	Inside Radius	Yield Str	Condition 1				Condition 2				Condition 3				Condition 4			
				1	3.5	4	6	1	3.5	4	6	1	3.5	4	6	1	3.5	4	6
600S - 30	0.0312	0.0781	33	319	489	514	602 [1]	440	587	609	685 [1]	141	180	185	205 [1]	298	379	391	433 [1]
600S - 33	0.0346	0.0764	33	387	589	619	724 [1]	543	719	745	836 [1]	183	231	238	263 1	389	491	506	559 [1]
600S - 43	0.0451	0.0712	33	634	948	995	1157 [1]	928	1204	1245	1387 [1]	348	431	443	486 1	751	930	956	1048 [1]
600S - 54	0.0566	0.0849	33	944	1388	1454	1683 [1]	1420	1810	1868	2070 [1]	583	710	729	795 [1]	1260	1536	1577	1719 [1]
600S - 54	0.0566	0.0849	50	1430	2103	2203	2551 [1]	2151	2743	2831	3136 [1]	883	1076	1105	1205 [1]	1909	2327	2389	2605 [1]
600S - 68	0.0713	0.1069	33	1411	2040	2133	2458 [1]	2178	2731	2813	3099 [1]	968	1163	1192	1292 [1]	2095	2515	2577	2794 [1]
600S - 68	0.0713	0.1069	50	2138	3091	3233	3724 [1]	3299	4138	4262	4695 [1]	1467	1762	1806	1958 [1]	3173	3811	3905	4234 [1]
600S - 97	0.1017	0.1525	50	3994	5620	5861	6701 [1]	6404	7834	8046	8785 [1]	3150	3700	3781	4065 [1]	6812	8001	8178	8792 [1]
600S - 118	0.1242	0.1863	50	5696	7892	8218	9351 [1]	9325	11257	11543	12540 [1]	4808	5583	5698	6097 [1]	10398	12074	12322	13187 [1]
800S - 43	0.0451	0.0712	33	633	946	993	1154	926	1202	1242	1384	302	374	384	421	651	806	829	909
800S - 54	0.0566	0.0849	33	942	1386	1452	1681	1417	1807	1865	2067	519	633	650	709	1123	1369	1405	1532
800S - 54	0.0566	0.0849	50	1428	2100	2200	2546	2147	2738	2826	3131	787	959	985	1074	1701	2074	2129	2322
800S - 68	0.0713	0.1069	33	1409	2037	2130	2455	2174	2727	2809	3094	881	1058	1084	1175	1905	2287	2344	2542
800S - 68	0.0713	0.1069	50	2135	3087	3228	3719	3295	4132	4256	4688	1335	1602	1642	1780	2886	3466	3552	3851
800S - 97	0.1017	0.1525	50	3989	5613	5854	6692	6396	7825	8036	8774	2929	3441	3517	3781	6335	7442	7606	8177
800S - 118	0.1242	0.1863	50	5690	7883	8209	9341	9314	11244	11530	12526	4514	5241	5349	5724	9762	11335	11568	12380
1000S - 54	0.0566	0.0849	33	941	1384	1450	1678	1415	1805	1863	2064	464	565	580	633	1003	1222	1255	1368
1000S - 54	0.0566	0.0849	50	1426	2097	2196	2543	2144	2735	2822	3127	702	856	879	959	1519	1852	1901	2073
1000S - 68	0.0713	0.1069	33	1407	2035	2128	2451	2172	2723	2805	3090	804	965	989	1073	1739	2088	2140	2320
1000S - 68	0.0713	0.1069	50	2132	3083	3224	3714	3290	4126	4250	4682	1218	1463	1499	1625	2635	3164	3242	3515
1000S - 97	0.1017	0.1525	50	3985	5607	5848	6685	6389	7816	8028	8764	2737	3215	3286	3533	5919	6953	7107	7640
1000S - 118	0.1242	0.1863	50	5684	7875	8200	9332	9305	11233	11519	12514	4257	4943	5045	5399	9208	10691	10911	11677
1200S - 68	0.0713	0.1069	33	1406	2032	2125	2449	2169	2720	2802	3086	735	883	904	981	1590	1909	1956	2121
1200S - 68	0.0713	0.1069	50	2130	3079	3220	3710	3287	4122	4245	4676	1114	1337	1370	1486	2408	2892	2964	3213
1200S - 97	0.1017	0.1525	50	3981	5601	5842	6678	6383	7808	8020	8756	2564	3012	3078	3309	5545	6514	6658	7158
1200S - 118	0.1242	0.1863	50	5679	7868	8193	9323	9297	11223	11508	12503	4027	4676	4772	5107	8710	10113	10321	11046
1400S - 68	0.0713	0.1069	33	1404	2030	2123	2446	2167	2717	2799	3083	672	806	826	896	1452	1744	1787	1938
1400S - 68	0.0713	0.1069	50	2127	3076	3216	3706	3283	4117	4241	4671	1018	1222	1252	1358	2201	2642	2708	2936
1400S - 97	0.1017	0.1525	50	3977	5596	5837	6672	6377	7801	8013	8748	2406	2826	2888	3105	5203	6111	6246	6715
1400S - 118	0.1242	0.1863	50	5674	7862	8186	9316	9289	11214	11499	12492	3817	4432	4523	4840	8254	9584	9781	10468
1600S - 97	0.1017	0.1525	50	3974	5592	5832	6667	6372	7795	8006	8741	2259	2653	2712	2915	4885	5738	5864	6305
1600S - 118	0.1242	0.1863	50	5670	7856	8180	9309	9282	11205	11490	12483	3621	4205	4291	4592	7832	9093	9281	9932

[1] Bearing length to web height ratio, N/h, exceeds limit of 1.0
[2] Bearing length to thickness ratio, N/t, exceeds limit of 210

See Web Crippling Load Table Notes page 81.

Channel Properties

SFIA
STEEL FRAMING INDUSTRY ASSOCIATION

U-Channel Section Properties

Section	Design Thickness (in)	Yield strength, Fy (ksi)	Gross Properties						Effective Properties			
			Area	Weight	Ix	Rx	Iy	Ry	Ix	Sx	Ma	Va
			(in2)	(lb/ft)	(in4)	(in)	(in4)	(in)	(in4)	(in3)	(in-k)	(lb)
075U050-54	0.0566	33	0.087	0.296	0.007	0.289	0.002	0.156	0.007	0.019	0.459	315
150U050-54	0.0566	33	0.130	0.441	0.039	0.549	0.003	0.146	0.039	0.052	1.230	840
200U050-54	0.0566	33	0.158	0.537	0.080	0.711	0.003	0.137	0.080	0.080	1.883	1190
250U050-54	0.0566	33	0.186	0.633	0.140	0.868	0.003	0.130	0.140	0.112	2.648	1540

1. Calculated properties are based on AISI S100-12, "North American Specification for Design of Cold-Formed Steel Structural Members."
2. Minimum base metal thickness is 95% of design thickness.
3. Effective properties are based on Fy=33ksi.

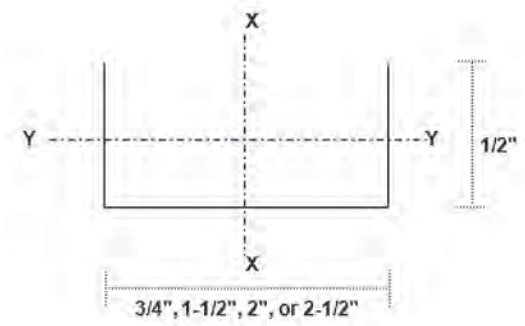

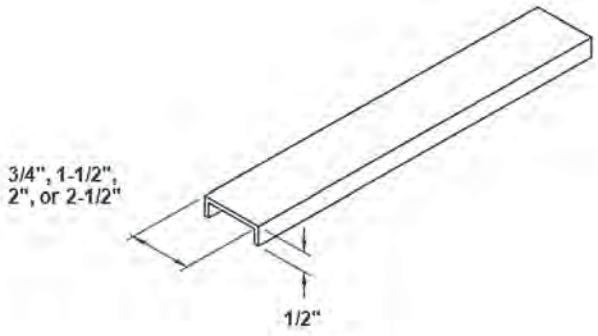

U-Channel Allowable Ceiling Spans L/360

Member	Spans	4 psf					6 psf					13 psf					15 psf				
		Channel Spacing (in) o.c.					Channel Spacing (in) o.c.					Channel Spacing (in) o.c.					Channel Spacing (in) o.c.				
		24	36	48	60	72	24	36	48	60	72	24	36	48	60	72	24	36	48	60	72
075U050-54	Single	3' 5"	3' 0"	2' 9"	2' 6"	2' 4"	3' 0"	2' 7"	2' 4"	2' 2"	2' 1"	2' 4"	2' 0"	1' 10"	1' 8"	1' 7"	2' 2"	1' 11"	1' 9"	1' 7"	1' 6"
	Multiple	4' 2"	3' 8"	3' 4"	3' 1"	2' 11"	3' 8"	3' 2"	2' 11"	2' 8"	2' 7"	2' 10"	2' 6"	2' 3"	2' 1"	1' 11"	2' 8"	2' 4"	2' 2"	2' 0"	1' 9"
150U050-54	Single	5' 6"	4' 10"	4' 5"	4' 1"	3' 10"	4' 10"	4' 3"	3' 10"	3' 7"	3' 5"	3' 9"	3' 4"	3' 0"	2' 9"	2' 7"	3' 7"	3' 2"	2' 10"	2' 7"	2' 5"
	Multiple	7' 1"	6' 2"	5' 8"	5' 3"	4' 11"	6' 2"	5' 5"	4' 11"	4' 7"	4' 4"	4' 10"	4' 2"	3' 9"	3' 4"	3' 0"	4' 7"	4' 0"	3' 6"	3' 1"	2' 9"
200U050-54	Single	5' 10"	5' 1"	4' 8"	4' 4"	4' 1"	5' 1"	4' 6"	4' 1"	3' 10"	3' 7"	4' 0"	3' 6"	3' 2"	3' 0"	2' 10"	3' 10"	3' 4"	3' 1"	2' 10"	2' 8"
	Multiple	7' 5"	6' 6"	5' 11"	5' 6"	5' 2"	6' 6"	5' 8"	5' 2"	4' 10"	4' 7"	5' 1"	4' 5"	4' 0"	3' 9"	3' 6"	4' 10"	4' 3"	3' 10"	3' 7"	3' 2"
250U050-54	Single	6' 1"	5' 4"	4' 10"	4' 6"	4' 3"	5' 4"	4' 8"	4' 3"	4' 0"	3' 9"	4' 2"	3' 8"	3' 4"	3' 1"	2' 11"	4' 0"	3' 6"	3' 2"	3' 0"	2' 10"
	Multiple	7' 9"	6' 9"	6' 2"	5' 9"	5' 5"	6' 9"	5' 11"	5' 5"	5' 0"	4' 9"	5' 3"	4' 7"	4' 3"	3' 11"	3' 9"	5' 0"	4' 5"	4' 0"	3' 9"	3' 7"

U-Channel Allowable Ceiling Spans L/240

Member	Spans	4 psf					6 psf					13 psf					15 psf				
		Channel Spacing (in) o.c.					Channel Spacing (in) o.c.					Channel Spacing (in) o.c.					Channel Spacing (in) o.c.				
		24	36	48	60	72	24	36	48	60	72	24	36	48	60	72	24	36	48	60	72
075U050-54	Single	3' 11"	3' 5"	3' 1"	2' 11"	2' 9"	3' 5"	3' 0"	2' 9"	2' 6"	2' 4"	2' 8"	2' 4"	2' 1"	1' 11"	1' 9"	2' 6"	2' 2"	2' 0"	1' 10"	1' 8"
	Multiple	4' 10"	4' 2"	3' 10"	3' 7"	3' 4"	4' 2"	3' 8"	3' 4"	3' 1"	2' 10"	3' 3"	2' 9"	2' 4"	2' 1"	1' 11"	3' 1"	2' 7"	2' 2"	2' 0"	1' 9"
150U050-54	Single	5' 6"	4' 10"	4' 5"	4' 1"	3' 10"	4' 10"	4' 3"	3' 10"	3' 7"	3' 5"	3' 9"	3' 4"	3' 0"	2' 9"	2' 7"	3' 7"	3' 2"	2' 10"	2' 7"	2' 5"
	Multiple	7' 1"	6' 2"	5' 8"	5' 3"	4' 11"	6' 2"	5' 5"	4' 11"	4' 7"	4' 4"	4' 10"	4' 2"	3' 9"	3' 4"	3' 0"	4' 7"	4' 0"	3' 6"	3' 1"	2' 9"
200U050-54	Single	5' 10"	5' 1"	4' 8"	4' 4"	4' 1"	5' 1"	4' 6"	4' 1"	3' 10"	3' 7"	4' 0"	3' 6"	3' 2"	3' 0"	2' 10"	3' 10"	3' 4"	3' 1"	2' 10"	2' 8"
	Multiple	7' 5"	6' 6"	5' 11"	5' 6"	5' 2"	6' 6"	5' 8"	5' 2"	4' 10"	4' 7"	5' 1"	4' 5"	4' 0"	3' 9"	3' 6"	4' 10"	4' 3"	3' 10"	3' 7"	3' 2"
250U050-54	Single	6' 1"	5' 4"	4' 10"	4' 6"	4' 3"	5' 4"	4' 8"	4' 3"	4' 0"	3' 9"	4' 2"	3' 8"	3' 4"	3' 1"	2' 11"	4' 0"	3' 6"	3' 2"	3' 0"	2' 10"
	Multiple	7' 9"	6' 9"	6' 2"	5' 9"	5' 5"	6' 9"	5' 11"	5' 5"	5' 0"	4' 9"	5' 3"	4' 7"	4' 3"	3' 11"	3' 9"	5' 0"	4' 5"	4' 0"	3' 9"	3' 7"

U-Channel Allowable Ceiling Spans L/120

Member	Spans	4 psf					6 psf					13 psf					15 psf				
		Channel Spacing (in) o.c.					Channel Spacing (in) o.c.					Channel Spacing (in) o.c.					Channel Spacing (in) o.c.				
		24	36	48	60	72	24	36	48	60	72	24	36	48	60	72	24	36	48	60	72
075U050-54	Single	4' 10"	4' 1"	3' 7"	3' 3"	3' 0"	4' 1"	3' 5"	3' 0"	2' 9"	2' 6"	2' 11"	2' 5"	2' 2"	1' 11"	1' 9"	2' 9"	2' 4"	2' 0"	1' 10"	1' 8"
	Multiple	5' 5"	4' 6"	4' 2"	3' 10"	3' 5"	4' 6"	3' 11"	3' 5"	3' 2"	2' 11"	3' 5"	2' 9"	2' 4"	2' 1"	1' 11"	3' 1"	2' 7"	2' 2"	2' 0"	1' 9"
150U050-54	Single	5' 6"	4' 10"	4' 5"	4' 1"	3' 10"	4' 10"	4' 3"	3' 10"	3' 7"	3' 5"	3' 9"	3' 4"	3' 0"	2' 9"	2' 7"	3' 7"	3' 2"	2' 10"	2' 7"	2' 5"
	Multiple	7' 1"	6' 2"	5' 8"	5' 3"	4' 11"	6' 2"	5' 5"	4' 11"	4' 7"	4' 4"	4' 10"	4' 2"	3' 9"	3' 4"	3' 0"	4' 7"	4' 0"	3' 6"	3' 1"	2' 9"
200U050-54	Single	5' 10"	5' 1"	4' 8"	4' 4"	4' 1"	5' 1"	4' 6"	4' 1"	3' 10"	3' 7"	4' 0"	3' 6"	3' 2"	3' 0"	2' 10"	3' 10"	3' 4"	3' 1"	2' 10"	2' 8"
	Multiple	7' 5"	6' 6"	5' 11"	5' 6"	5' 2"	6' 6"	5' 8"	5' 2"	4' 10"	4' 7"	5' 1"	4' 5"	4' 0"	3' 9"	3' 6"	4' 10"	4' 3"	3' 10"	3' 7"	3' 2"
250U050-54	Single	6' 1"	5' 4"	4' 10"	4' 6"	4' 3"	5' 4"	4' 8"	4' 3"	4' 0"	3' 9"	4' 2"	3' 8"	3' 4"	3' 1"	2' 11"	4' 0"	3' 6"	3' 2"	3' 0"	2' 10"
	Multiple	7' 9"	6' 9"	6' 2"	5' 9"	5' 5"	6' 9"	5' 11"	5' 5"	5' 0"	4' 9"	5' 3"	4' 7"	4' 3"	3' 11"	3' 9"	5' 0"	4' 5"	4' 0"	3' 9"	3' 7"

1. Allowable ceiling spans are based on effective properties.
2. Multiple span indicates two ro more equal spans with channel continuous over center support.
3. Bearing length = 0.75-inches.
4. Table values are based on the compression flange laterally unsupported.

Channel Properties

(Hat) Furring (F) Channel Section Properties

Section	Design Thickness (in)	Yield strength, Fy (ksi)	Gross Properties						Effective Properties			
			Area	Weight	Ix	Rx	Iy	Ry	Ix	Sx	Ma	Va
			(in^2)	(lb/ft)	(in^4)	(in)	(in^4)	(in)	(in^4)	(in^3)	(ft-lb)	(lb)
087F125-18	0.0188	33	0.072	0.244	0.009	0.354	0.035	0.698	0.008	0.016	26.61	255
087F125-27	0.0283	33	0.107	0.365	0.013	0.351	0.051	0.693	0.013	0.027	45.20	381
087F125-30	0.0312	33	0.118	0.401	0.014	0.350	0.056	0.691	0.014	0.031	50.98	420
087F125-33	0.0346	33	0.130	0.443	0.016	0.349	0.062	0.689	0.016	0.034	56.23	464
087F125-43	0.0451	33	0.168	0.572	0.020	0.345	0.079	0.684	0.020	0.043	71.00	599
150F125-18	0.0188	33	0.095	0.324	0.031	0.572	0.052	0.742	0.029	0.034	56.73	261
150F125-27	0.0283	33	0.143	0.485	0.046	0.569	0.077	0.737	0.046	0.057	94.22	390
150F125-30	0.0312	33	0.157	0.534	0.051	0.568	0.085	0.735	0.050	0.064	105.92	429
150F125-33	0.0346	33	0.174	0.590	0.056	0.566	0.093	0.733	0.056	0.071	117.31	474
150F125-43	0.0451	33	0.225	0.764	0.071	0.563	0.119	0.728	0.071	0.091	149.70	613

1. Calculated properties are based on AISI S100-12, "North American Specification for Design of Cold-Formed Steel Structural Members."
2. Minimum base metal thickness is 95% of design thickness. Design thickness used for determination of properties.
3. Effective properties are based on Fy=33ksi. For deflection calculations, use effective Ix. Effective Ix is based on Procedure 1 of S-100.
4. Effective properties are given as the minimum value for positive or negative bending.

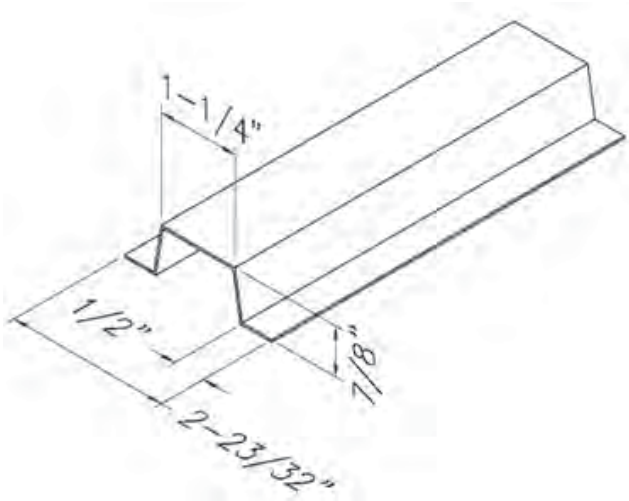

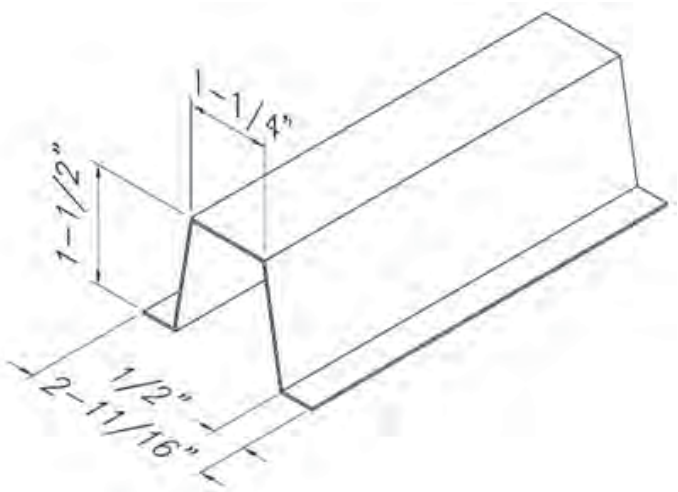

(Hat) Furring (F) Channel Allowable Ceiling Spans L/360

Member	Yield Strength, Fy (ksi)	Spans	4 psf			6 psf			13 psf		
			Spacing (in) o.c.			Spacing (in) o.c.			Spacing (in) o.c.		
			12	16	24	12	16	24	12	16	24
087F125-18	33	Single	4' 5"	4' 0"	3' 6"	3' 10"	3' 6"	3' 1"	3' 0"	2' 9"	2' 5"
		Multiple	5' 6"	5' 0"	4' 4"	4' 9"	4' 4"	3' 10"	3' 8"	3' 4"	2' 10"
087F125-27	33	Single	5' 3"	4' 9"	4' 2"	4' 7"	4' 2"	3' 8"	3' 6"	3' 3"	2' 10"
		Multiple	6' 6"	5' 11"	5' 2"	5' 8"	5' 2"	4' 6"	4' 4"	4' 0"	3' 6"
087F125-30	33	Single	5' 5"	4' 11"	4' 3"	4' 9"	4' 3"	3' 9"	3' 8"	3' 4"	2' 11"
		Multiple	6' 8"	6' 1"	5' 3"	5' 10"	5' 3"	4' 7"	4' 6"	4' 1"	3' 7"
087F125-33	33	Single	5' 7"	5' 1"	4' 5"	4' 10"	4' 5"	3' 10"	3' 9"	3' 5"	3' 0"
		Multiple	6' 11"	6' 3"	5' 6"	6' 0"	5' 6"	4' 9"	4' 8"	4' 3"	3' 8"
087F125-43	33	Single	6' 0"	5' 6"	4' 9"	5' 3"	4' 9"	4' 2"	4' 1"	3' 8"	3' 3"
		Multiple	7' 5"	6' 9"	5' 11"	6' 6"	5' 11"	5' 2"	5' 0"	4' 7"	4' 0"
150F125-18	33	Single	6' 10"	6' 2"	5' 5"	5' 11"	5' 5"	4' 9"	4' 7"	4' 2"	3' 8"
		Multiple	8' 5"	7' 8"	6' 8"	7' 4"	6' 8"	5' 10"	5' 8"	4' 9"	3' 8"
150F125-27	33	Single	7' 11"	7' 3"	6' 4"	6' 11"	6' 4"	5' 6"	5' 4"	4' 11"	4' 3"
		Multiple	9' 10"	8' 11"	7' 10"	8' 7"	7' 10"	6' 10"	6' 8"	6' 0"	5' 3"
150F125-30	33	Single	8' 2"	7' 5"	6' 6"	7' 2"	6' 6"	5' 8"	5' 6"	5' 0"	4' 5"
		Multiple	10' 1"	9' 2"	8' 0"	8' 10"	8' 0"	7' 0"	6' 10"	6' 3"	5' 5"
150F125-33	33	Single	8' 6"	7' 8"	6' 9"	7' 5"	6' 9"	5' 10"	5' 9"	5' 2"	4' 6"
		Multiple	10' 6"	9' 6"	8' 4"	9' 2"	8' 4"	7' 3"	7' 1"	6' 5"	5' 7"
150F125-43	33	Single	9' 2"	8' 4"	7' 4"	8' 0"	7' 4"	6' 4"	6' 2"	5' 8"	4' 11"
		Multiple	11' 4"	10' 4"	9' 0"	9' 11"	9' 0"	7' 11"	7' 8"	7' 0"	6' 1"

1. Allowable ceiling spans are based on effective properties.
2. Multiple span indicates two ro more equal spans with channel continuous over center support.
3. Bearing length = 0.75-inches.

(Hat) Furring (F) Channel Allowable Ceiling Spans L/240

Member	Yield Strength, Fy (ksi)	Spans	4 psf Spacing (in) o.c. 12	4 psf 16	4 psf 24	6 psf Spacing (in) o.c. 12	6 psf 16	6 psf 24	13 psf Spacing (in) o.c. 12	13 psf 16	13 psf 24
087F125-18	33	Single	5' 1"	4' 7"	4' 0"	4' 5"	4' 0"	3' 6"	3' 5"	3' 1"	2' 9"
		Multiple	6' 3"	5' 8"	5' 0"	5' 6"	5' 0"	4' 3"	4' 1"	3' 6"	2' 10"
087F125-27	33	Single	6' 0"	5' 5"	4' 9"	5' 3"	4' 9"	4' 2"	4' 1"	3' 8"	3' 3"
		Multiple	7' 5"	6' 9"	5' 11"	6' 6"	5' 11"	5' 2"	5' 0"	4' 7"	3' 9"
087F125-30	33	Single	6' 2"	5' 7"	4' 11"	5' 5"	4' 11"	4' 3"	4' 2"	3' 9"	3' 4"
		Multiple	7' 8"	6' 11"	6' 1"	6' 8"	6' 1"	5' 3"	5' 2"	4' 8"	4' 0"
087F125-33	33	Single	6' 5"	5' 10"	5' 1"	5' 7"	5' 1"	4' 5"	4' 4"	3' 11"	3' 5"
		Multiple	7' 11"	7' 2"	6' 3"	6' 11"	6' 3"	5' 6"	5' 4"	4' 10"	4' 2"
087F125-43	33	Single	6' 11"	6' 3"	5' 6"	6' 0"	5' 6"	4' 9"	4' 8"	4' 3"	3' 8"
		Multiple	8' 6"	7' 9"	6' 9"	7' 5"	6' 9"	5' 11"	5' 9"	5' 3"	4' 7"
150F125-18	33	Single	7' 10"	7' 1"	6' 2"	6' 10"	6' 2"	5' 5"	5' 3"	4' 9"	4' 2"
		Multiple	9' 8"	8' 9"	7' 6"	8' 5"	7' 6"	6' 2"	5' 10"	4' 9"	3' 8"
150F125-27	33	Single	9' 1"	8' 3"	7' 3"	7' 11"	7' 3"	6' 4"	6' 2"	5' 7"	4' 11"
		Multiple	11' 3"	10' 3"	8' 11"	9' 10"	8' 11"	7' 10"	7' 7"	6' 7"	5' 5"
150F125-30	33	Single	9' 5"	8' 6"	7' 5"	8' 2"	7' 5"	6' 6"	6' 4"	5' 9"	5' 0"
		Multiple	11' 7"	10' 6"	9' 2"	10' 1"	9' 2"	8' 0"	7' 10"	7' 0"	5' 9"
150F125-33	33	Single	9' 8"	8' 10"	7' 8"	8' 6"	7' 8"	6' 9"	6' 7"	5' 11"	5' 2"
		Multiple	12' 0"	10' 11"	9' 6"	10' 6"	9' 6"	8' 4"	8' 1"	7' 4"	6' 0"
150F125-43	33	Single	10' 6"	9' 7"	8' 4"	9' 2"	8' 4"	7' 4"	7' 1"	6' 5"	5' 8"
		Multiple	13' 0"	11' 10"	10' 4"	11' 4"	10' 4"	9' 0"	8' 9"	8' 0"	6' 9"

(Hat) Furring (F) Channel Allowable Ceiling Spans L/120

Member	Yield Strength, Fy (ksi)	Spans	4 psf Spacing (in) o.c. 12	4 psf 16	4 psf 24	6 psf Spacing (in) o.c. 12	6 psf 16	6 psf 24	13 psf Spacing (in) o.c. 12	13 psf 16	13 psf 24
087F125-18	33	Single	6' 5"	5' 10"	5' 1"	5' 7"	5' 1"	4' 5"	4' 4"	3' 11"	3' 5"
		Multiple	7' 4"	6' 4"	5' 1"	5' 11"	5' 2"	4' 2"	4' 1"	3' 6"	2' 10"
087F125-27	33	Single	7' 7"	6' 10"	6' 0"	6' 7"	6' 0"	5' 3"	5' 1"	4' 8"	4' 1"
		Multiple	9' 4"	8' 3"	6' 8"	7' 9"	6' 9"	5' 5"	5' 3"	4' 7"	3' 8"
087F125-30	33	Single	7' 9"	7' 1"	6' 2"	6' 10"	6' 2"	5' 5"	5' 3"	4' 9"	4' 2"
		Multiple	9' 7"	8' 9"	7' 1"	8' 3"	7' 2"	5' 9"	5' 7"	4' 10"	3' 11"
087F125-33	33	Single	8' 0"	7' 4"	6' 5"	7' 0"	6' 5"	5' 7"	5' 5"	4' 11"	4' 4"
		Multiple	9' 11"	9' 0"	7' 5"	8' 8"	7' 6"	6' 1"	5' 11"	5' 1"	4' 1"
087F125-43	33	Single	8' 8"	7' 11"	6' 11"	7' 7"	6' 11"	6' 0"	5' 10"	5' 4"	4' 8"
		Multiple	10' 9"	9' 9"	8' 5"	9' 5"	8' 5"	6' 10"	6' 7"	5' 9"	4' 8"
150F125-18	33	Single	9' 10"	8' 11"	7' 10"	8' 7"	7' 10"	6' 10"	6' 8"	6' 0"	5' 3"
		Multiple	10' 8"	9' 3"	7' 6"	8' 8"	7' 6"	6' 1"	5' 10"	4' 5"	2' 11"
150F125-27	33	Single	11' 6"	10' 5"	9' 1"	10' 0"	9' 1"	7' 11"	7' 9"	7' 0"	6' 2"
		Multiple	13' 9"	11' 11"	9' 8"	11' 2"	9' 8"	7' 11"	7' 7"	6' 7"	5' 4"
150F125-30	33	Single	11' 10"	10' 9"	9' 5"	10' 4"	9' 5"	8' 2"	8' 0"	7' 3"	6' 4"
		Multiple	14' 7"	12' 7"	10' 3"	11' 11"	10' 3"	8' 4"	8' 1"	7' 0"	5' 8"
150F125-33	33	Single	12' 3"	11' 1"	9' 8"	10' 8"	9' 8"	8' 6"	8' 3"	7' 6"	6' 7"
		Multiple	15' 1"	13' 3"	10' 9"	12' 6"	10' 10"	8' 10"	8' 6"	7' 4"	6' 0"
150F125-43	33	Single	13' 3"	12' 1"	10' 6"	11' 7"	10' 6"	9' 2"	8' 11"	8' 2"	7' 1"
		Multiple	16' 5"	14' 11"	12' 2"	14' 2"	12' 3"	9' 11"	9' 7"	8' 4"	6' 9"

1. Single spans taken as the minimum span based on moment, shear, web crippling or deflection.
2. Multiple span indicates two or more equal, continuous spans with span length measured support to support.
3. Multiple spans taken as minimum span based on moment, shear, web crippling, deflection combined bending and shear or combined bending and web crippling.
4. Web crippling values based on 1-inch bearing at end and interior supports.

Screw Table Notes

1. Allowable screw connection capacities are based on Section E4 of the AISI S100-12.
2. When connecting materials of different steel thicknessess or tensile strengths, use the lowest values. Tabulated values assume two sheets of equal thickness are connected.
3. Screw shear and tension capacities was developed using published screw manufacturer data and evaluation reports available at the time of publications.
4. A nominal shear stress of 42.85ksi and a nominal tension stress of 40.84ksi was used for calculations based on screw manufacturer data.
5. Screw capacities are based on Allowable Strength Design (ASD) and include safety factor of 3.0.
6. When multiple fasteners are used, screws are assumed to have a center-to-center spacing of at least 3 times the nominal diameter (d).
7. Screws are assumed to have a center-of-screw to edge-of-steel dimension of at least 1.5 times the nominal diameter (d) of the screw. At free edges, the designer must verify the edge distance per Section E4.2 of AISI S100-12.
8. Tension capacity is based on the lesser of pullout capacity in sheet closest to screw tip, or pullover capacity for sheet closest to screw head (using head diameter).
9. Note that for all tension values calculated in screw table, pullover values have been reduced by 50% assuming eccentrically loaded connections that produce a non uniform pullover force of the fastener.
10. Screw capacities are governed by a conservative estimate of screw capacity, not by sheet steel failure.
11. For higher screw capacities, especially for screw strength, use specific screws from specific manufacturer. See manufacturer's data for specific allowable values and installation instructions.

Allowable Screw Connection Capacity (Pounds per Screw)

Thickness (Mils)	Yield Strength, Fy (ksi)	Tensile Strength, Fu (ksi)	# 6 Screw (0.138" Dia, 1/4" Head)		# 8 Screw (0.164" Dia, 5/16" Head)		# 10 Screw (0.190" Dia, 0.340" Head)		# 12 Screw (0.216" Dia, 0.340" Head)		1/4" Screw (0.250" Dia, 0.409" Head)	
			Shear	Tension	Shear	Tension	Shear	Tension	Shear	Tension	Shear	Tension
18	33	33	44	24	48	29	52	33	55	38	60	44
27	33	33	82	37	89	43	96	50	102	57	110	66
30	33	33	95	40	103	48	111	55	118	63	127	73
33	33	45	151	61	164	72	177	84	188	95	203	110
43	33	45	214	79	244	94	263	109	280	124	302	144
54	33	45	214	100	303	118	370	137	394	156	424	180
54	50	65	214	123	303	171	406	198	525	225	613	261
68	33	45	214	123	303	149	406	173	525	196	600	227
68	50	65	214	123	303	173	406	232	525	284	704	328
97	33	45	214	123	303	173	406	232	525	280	704	324
97	50	65	214	123	303	173	406	232	525	300	704	403
118	33	45	214	123	303	173	406	232	525	300	704	396
118	50	65	214	123	303	173	406	232	525	300	704	403

Weld Table Notes

1. Allowable weld capacities are based on Section E2.5 (for fillet welds) and E2.6 (for flare groove welds) of the AISI S100-12.
2. When connecting materials of different steel thicknesses or tensile strengths, use the lowest values.
3. Weld capacities are based on Allowable Strength Design (ASD) and include appropriate safety factors.
4. Weld capacities are based on either 3/32" or 1/8" diameter E60 or E70 Electrodes. For thinner materials, 0.030" to 0.035" diameter wire electrodes may provide best results.
5. Parallel capacity is considered to be loading in the direction of the weld.
6. For flare groove welds, the effective throat of weld is conservatively assumed to be less that 2t.

Allowable Weld Capacity (Pounds) for 1-inch of Weld

Thickness (Mils)	Design Thickness	Fy: Yield (ksi)	Fu: Tensile (ksi)	Fillet Welds		Flare Groove Welds	
				Parallel	Perpendicular	Parallel	Perpendicular
43	0.0451	33	45	619	864	544	663
54	0.0566	33	45	822	1084	682	832
54	0.0566	50	65	1188	1566	985	1202
68	0.0713	33	45	1082	1365	859	1048
68	0.0713	50	65	1563	1972	1241	1514
97	0.1017	33	45	1618	1947	1226	1495
97	0.1017	50	65	2337	2813	1771	2159
118	0.1242	33	45	Note-1	Note-1	Note-2	Note-2
118	0.1242	50	65	Note-1	Note-1	Note-2	Note-2

Note-1: For fillet welds, AISI S100 Equation E2.5-4 must be checked for 118 mil material, or whenever the thickness of thinnest part is greater that 0.10-inch.

Note-2: For flare groove welds, AISI S100 Equation E2.6-4 must be checked for 118 mil material, or whenever the thickness of thinnest part is greater that 0.10-inch.

BLOCKING NOTE:
PLACE SOLID BLOCKING AT ENDS OF FLOOR SYSTEM, ADJACENT TO ALL OPENINGS, AND AT 10'–0"o.c. MAX.

STRAP NOTE:
TOP STRAP NOT REQ'D. IF CONTINUOUSLY ATTACHED RIGID SHEATHING IS USED. TEMPORARY BRACING OF TOP FLANGE DURING CONSTRUCTION MAY BE REQ'D.

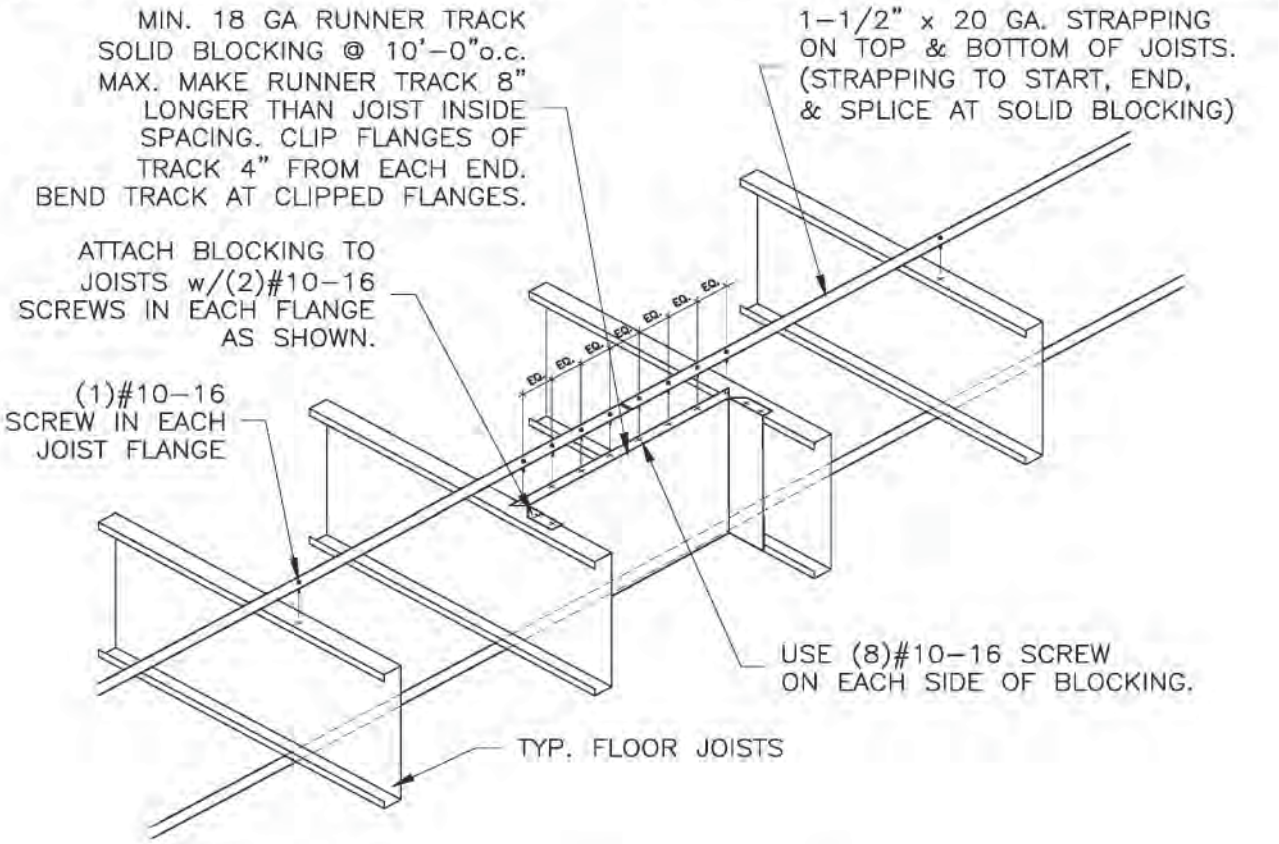

BRIDGING RECOMMENDATIONS	
SPANS	ROWS REQUIRED
UP TO 14'	ONE ROW @ MID–SPAN
14' TO 20'	TWO ROWS @ THIRD POINTS
20' TO 26'	THREE ROWS @ QUARTER POINTS

JOIST BRIDGING

1–1/2" x 20GA. STRAP WITH RUNNER TRACK BLOCKING

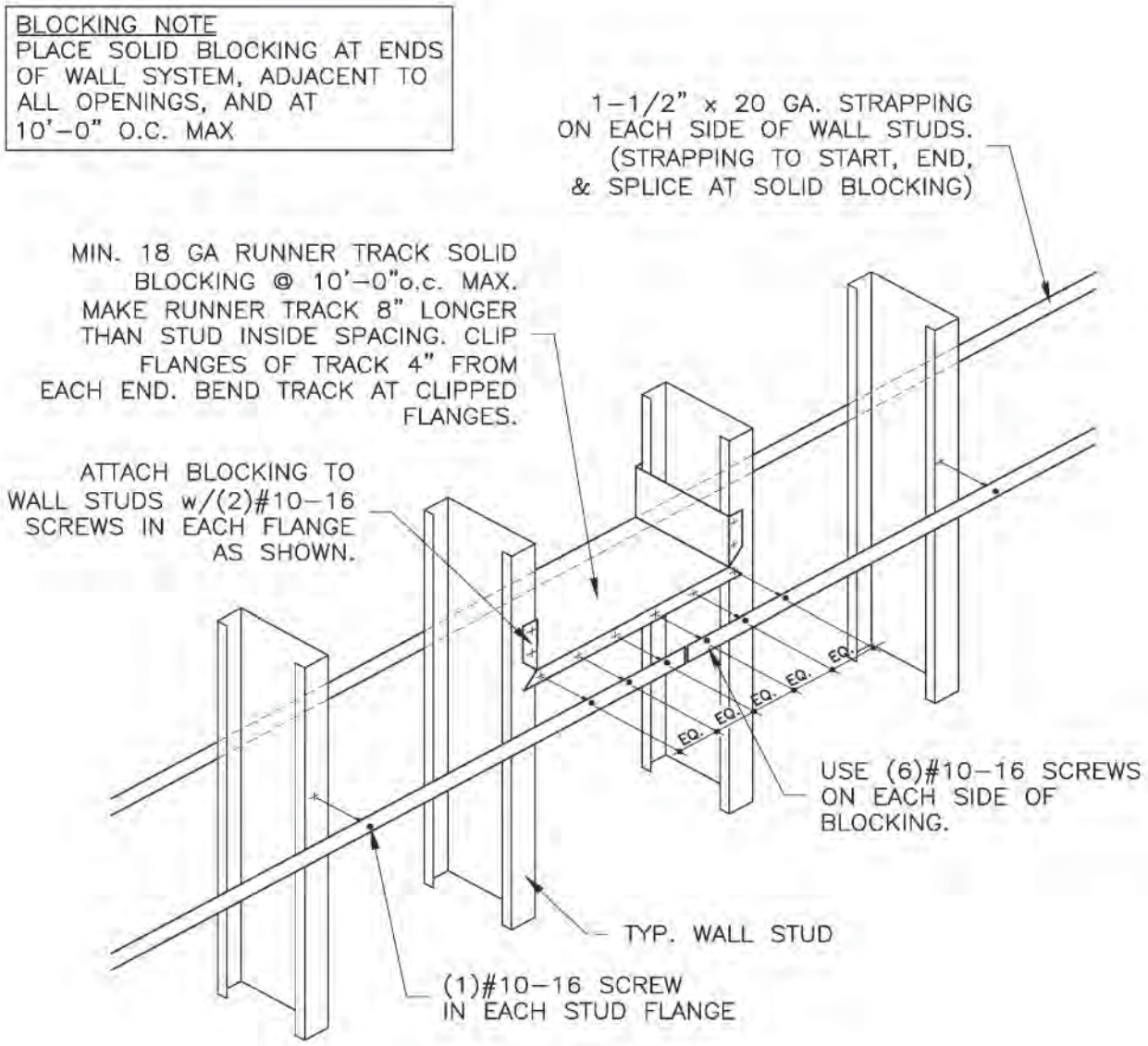

STRAPPING LATERAL BRACING

1-1/2" x 20GA. STRAP WITH RUNNER TRACK BLOCKING

Suggested Specifications

SFIA
STEEL FRAMING INDUSTRY ASSOCIATION

Scope of Work

The intent of this section is to establish the standard of quality for materials, fabrication and erection of light gage studs, track, floor joist, roof trusses, bridging and related accessories as indicated on the drawings and specified herein.

1.0 Applicable Standards

1.1 American Iron and Steel Institute (A.I.S.I.) Design of Cold Formed Steel Structural Members
1.2 American Welding Society (A.W.S.) Welding in Building Construction
1.3 American Society for Testing & Materials (A.S.T.M.)
1.4 Building Code as applicable
1.5 American Institute of Steel Construction (A.I.S.C.) Manual of Steel Construction

2.0 Submittals

2.1 Shop Drawings

2.1.1 Prior to fabrication of framing the contractor shall submit fabrication and erection drawings to the architect to obtain approval.
2.1.2 Indicate all member gauges, spacing and sizes.
2.1.3 Indicate shop and field assembly details including size, type and number of members, as well as cuts and connections.
2.1.4 Indicate type and location of welds, bolts and fastening devices.
2.1.5 When prefabricating, shop drawings shall indicate all prefabricated framing with individual panel drawings for each condition. Drawings to indicate panel configuration, dimensions, materials, attachments, and panel location.

2.2 Structural Calculations

2.2.1 Submit suggested structural design calculations as prepared by a professional engineer registered in the state where the project is located and who specializes in cold-formed steel framing.

2.3 Quality Assurance

2.3.1 Provide certification of code compliance with the "Code Compliance Certification Program" by the Steel Framing Industry Association.

3.0 Materials

3.1 All framing members shall be manufactured and supplied by a member of the Steel Framing Industry Association (SFIA) and be of the type and size as shown on the approved drawings.
3.2 All galvanized studs 12, 14, and 16 gauge shall be formed from steel that corresponds to the minimum requirement of ASTM A1003, with a minimum yield of 50,000 psi.
3.3 All galvanized 18 and 20 gauge studs, and all galvanized track, bridging, end closures and accessories shall be formed from steel that corresponds to the requirements of ASTM A1003, with minimum yield of 33,000 psi.
3.4 All galvanized studs and accessories shall be formed from steel having a CP 60 coating per ASTM C955 for structural members and with G40 or equivalent corrosion protection, per ASTM C645 for nonstructural members.
3.5 The physical and structural properties listed by (SFIA) shall be considered the minimum permitted for all framing members. Specifically, the following minimum properties, calculated in accordance with the latest AISI Specification S100 shall be provided: Ix(in. 4), Area (in.2), rx (in.), Fy (KSI). Resisting Moment (in-lb).
3.6 Any substitutions must be approved in writing ten (10) days prior to bid date, by the architect and/or engineer of record.

4.0 Fabrication

4.1 Prior to prefabrication of framing, the contractor shall submit fabrication and erection drawings to the architect or engineer to obtain approval.
4.2 Framing components may be preassembled into panels prior to erecting. Prefabricated panels shall be square, with components attached in a manner as to prevent racking.
4.3 All framing components shall be cut squarely for attachment to perpendicular members, or as required for an angular fit against abutting members. Members shall be held positively in place until properly fastened.
4.4 Axially loaded studs shall be installed in a manner, which will assure that ends of the studs are positioned against the inside track web, prior to stud and track attachment.
4.5 Provide insulation equal to that specified elsewhere in all multiple jamb studs and multiple-header members, which will not be accessible to the insulation contractor.

5.0 Execution

5.1 Erection (Walls)

5.1.1 Erect framing and panels plumb, level and square in strict accordance with the approved shop drawings.
5.1.2 Handling and lifting of prefabricated panels shall be done in a manner as to not cause distortion in any member.
5.1.3 Track shall be securely anchored to the supporting structure as shown on the fabrication and erection drawings.
5.1.4 At track butt joints, abutting pieces of track shall be securely anchored to a common structural element, or they shall be butt-welded or spliced together
5.1.5 Studs shall be plumbed, aligned and securely attached to the flange or webs of both upper and lower tracks.
5.1.6 Jack studs or cripples shall be installed below window sills, above window and door heads, at free standing stair rails, and elsewhere to furnish support, and shall be securely attached to supporting members.
5.1.7 Wall stud bridging shall be attached in a manner to prevent stud rotation. Bridging rows shall be spaced according to the manufacturer's recommendation. Without supportive data, the minimum bridging shall be 5'0" on center for wind loaded walls and 4'0" on center for axial loaded walls.
5.1.8 Framed wall openings shall include headers and supporting studs as shown on the plans.
5.1.9 Temporary bracing shall be provided until erection is completed.
5.1.10 Provide stud walls at locations indicated on plans as "shear walls" for frame stability and lateral load resistance.
5.1.11 Splices in axially loaded studs shall not be permitted.
5.1.12 Provision for structure vertical movement shall be provided where indicated on the plans using a device specifically designed for this purpose or other means in accordance with manufactures recommendations.

5.2 Erection (Cold-Formed Steel Joists)

5.2.1 Joists shall be located directly over bearing studs or a load distribution member shall be provided at the top track.
5.2.2 Provide web stiffeners at reaction points where indicated by plans.
5.2.3 Joist bridging shall be provided as shown on plans.
5.2.4 End blocking shall be provided where joist ends are not otherwise restrained from rotation.

6.0 Related Equipment

6.1 Cutting

6.1.1 A radial arm 7 ½ H.P. (3425 rpm) saw with an 18"x5/32" friction blade, style 9MR, having 280 teeth (10 teeth per inch) is frequently used in the shop. Other suggested shop cutting equipment includes either the radial arm saw or an abrasive cut-off (chop) saw with a reinforced abrasive blade; or a band saw.
6.1.2 For field cutting and small quantities, a 3 H.P. worm drive power saw equipped with a reinforced abrasive cut-off blade, a band saw or a power band saw will serve satisfactorily.

6.2 Welding

6.2.1 A wire feed type welder is recommended for fastest and most uniform welding in the shop. Good welds are also obtained with a 3/32" or 1/8" AWS type 6013 or 7014 rod with a welding heat of 60-110 amperes depending on the gauge of material and the fit of the parts.
6.2.2 Field welding of lightweight steel framing components can be accomplished using 225 amps, 230-volt single-phase current arc welder.

6.3 Screw Attachment

6.3.1 Fastening of metal-to-metal use of a reversible screw gun capable of handling metal self-tapping screws with a variable RPM speed of 0-2500 is recommended.
6.3.2 Attachment of metal to concrete: a self-contained, low velocity .22 caliber power-driving tool may be used where applicable.
6.3.3 Attachment of metal to concrete: use of expansion or anchor bolts may also be considered where applicable.

SFIA

STEEL FRAMING INDUSTRY ASSOCIATION

CODE COMPLIANCE CERTIFICATION PROGRAM

SFIA developed, an industry supported Code Compliance Certification Program endorsed by the Association of the Wall and Ceiling Industry. The program is accessible to all manufacturers to certify that structural and nonstructural cold-formed steel framing they produce complies with the IBC 2015 code requirements.

Structural and nonstructural cold-formed steel framing certification is administered and audited by an independent third Administrator meeting IAS AC98 requirements and demonstrating compliance with ISO/IEC Standard 17020.

The validation process includes a minimum of two unannounced manufacturing audits per year of each facility operated by a manufacturer, as well as on-going random selection and independent testing of certified structural and nonstructural cold-formed steel framing products.

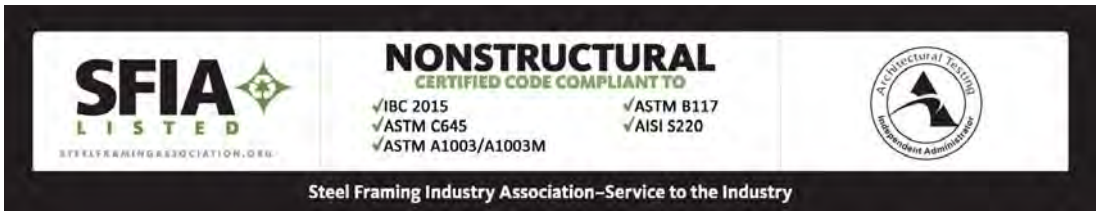

Manufacturing facilities that satisfy the requirements for certification are authorized to label structural and nonstructural cold-formed steel framing members they produce as "certified code compliant." The list of manufacturing facilities with certification authorization stays current by being updated as changes occur and can be found at www.steelframingassociation.org/certifications.

STEEL FRAMING INDUSTRY ASSOCIATION

The Steel Framing Industry Association is dedicated to expanding the market for cold-formed steel in construction through programs and initiatives that Promote the use of cold formed steel framing as a sustainable and cost-effective solution, Advocate the development and acceptance of favorable code provisions, Educate members with reliable data and other critical information that is essential to effective business planning, and create a positive environment for Innovation.

The SFIA is the only organization where members come from virtually every facet of the construction industry, including steel mills, coil coaters, stud and connector manufacturers, component fabricators, engineers, researchers, suppliers/distributors, and builders and framing contractors. This uniquely broad membership enables us to identify issues and opportunities, along with programs and solutions that can be effectively implemented across the industry.

513 West Broad Street, Suite 210
Falls Church, VA 22046
Phone: 703-538-1613
Fax: 703-538-1733
membership@steelframingassociation.org
www.steelframingassociation.org

Version 2015.101